CITY OF PHOENIX
Planning and Development Department
By: KLA
(KEITH LANGLOIS)
05/08/2023

This set of plans has been reviewed for ELECTRICAL prior to issuance of Building Permit and shall be kept at the construction site. Such review shall not prevent the Building Official from requiring correction of errors in the plans where such errors are subsequently found to be in violation of any law or ordinance.

DANCO RESIDENCE

4441 N JOKAKE DR SCOTTSDALE AZ 85251

READ ALL SHEETS PRIOR TO CONSTRUCTION, ALL CONSTRUCTION MUST ADHERE TO
CITY APPROVED CONSTRUCTION DOCUMENTS

RENDER BY GARRETT MCSORLEY

PROCA DESIGN LLC
STRUCTURAL AND ARCHITECTURAL DESIGNS
www.procadesign.net
(602) 606-2885
angelica@procadesign.com

ABBREVIATION

ABV	ABOVE
ADJ	ADJUSTABLE / ADJACENT
A/C	AIR CONDITIONING
ADD'L	ADDITIONAL
AFF	ABOVE FINISHED FLOOR
ALT	ALTERNATE
AB	ANCHOR BOLT
ARCH	ARCHITECTURAL
AUTO	AUTOMATIC
BLW	BELOW
BM	BEAM
BRG	BEARING
BTWN	BETWEEN
BLK	BLOCK
BLKG	BLOCKING
BTM	BOTTOM
B/O	BOTTOM OF
BLDG	BUILDING
BSL	BUILDING SETBACK LINE
CAB	CABINET
CFH	CUBIC FEET PER HOUR
CL	CENTER LINE
CLG	CEILING
CLG HT	CEILING HEIGHT
CTR	CENTER
CLR	CLEAR (ANCE)
CLO	CLOSET
CM	CULTURED MARBLE
COL	COLUMN
COMB	COMBUSTION
CONC	CONCRETE
CPT	CARPET
CMU	CONCRETE MASONRY UNIT
CONST	CONSTRUCTION
CONT	CONTINUOUS OR CONTINUE
CJ	CONTROL JOIN
CT	CIRCLE TOP/FULL ARCH TOP-WINDOW
d	DEEP / DEPTH
DTL	DETAIL
DIAG	DIAGONAL
DIA	DIAMETER
DIM	DIMENSION
DISP	DISPOSAL
DIV	DIVISION
DR	DOOR
DWG	DRAWING
DN	DOWN
ELECT	ELECTRIC (AL)
ELEV	ELEVATION
EA	EACH
EB	EYE BROW / EYEBALL
EJ	EXPANSION JOINT
EQ	EQUAL
EQUIP	EQUIPMENT
EXH	EXHAUST
EXIST	EXISTING
EXT	EXTERIOR
FAU	FORCED AIR UNIT
FIN	FINISH
FX	FIXED (PICTURE) WINDOW
FR	FRENCH
FLR	FLOOR
FD	FLOOR DRAIN
FLOUR	FLUORESCENT
FT	FOOT / FEET
FTG	FOOTING
FND	FOUNDATION
FURR	FURRED (ING)
FOS	FACE OF STUD
FG	FINISH GRADE
FJ	FLOOR JOIST
GA	GAUGE
GALV	GALVANIZED
GC	GENERAL CONTRACTOR
GL	GLASS, GLAZING
GL BLK	GLASS BLOCK
GYP BD	GYPSUM BOARD
GYP	GYPSUM
GI	GALVANIZED IRON
HDW	HARDWARE
HDR	HEADER
HVAC	HEATING / VENTING/AIR CONDITIONING
HC	HOLLOW CORE /HANDYCAP
h	HIGH
HT	HEIGHT
HOR	HORIZONTAL
HB	HOSE BIBB
HR	HOUR
IN	INCH
INCL	INCLUDE (ED) (ING)
INSUL	INSULATE/INSULATION
INT	INTERIOR
KIT	KITCHEN
LAV	LAVATORY
LDY	LAUNDRY
LIN	LINEN
LVR	LOUVER
LTG	LIGHTING
MFR	MANUFACTURE (R)
MAS	MASONRY
MO	MASONRY OPENING
MTL	MATERIAL / METAL
MAX	MAXIMUM
MECH	MECHANIC (AL)
MC	MEDICINE CABINET
MIN	MINIMUM
MISC	MISCELLANEOUS
NTS	NOT TO SCALE
o/c	ON CENTER
OBS	OBSCURE
OPT	OPTION (AL)
OH	OVERHEAD
OPNG	OPENING
PNL	PANEL
PBD	PARTICLE BOARD
PH	TELEPHONE
PL	PLATE
PT	PRESSURE TREATED PLUMBING
PLY	PLYWOOD
PVC	POLYVINYL CHLORIDE
PRV	PRESSURE RELIEF VALV
PSF	POUNDS PER SQUARE FOOT
PSI	POUNDS PER SQUARE INCH
PL	PROPERTY LINE
PR	PAIR
RAD	RADIOUS
REC	RECEPTACLE
REF	REFRIGERATOR
REINF	REINFORCE (D) (ING)
R/A	RETURN AIR
RM	ROOM
RO	ROUGH OPENING
R&S	ROD AND SHELF
SCH	SCHEDULE
SECT	SECTION
SGD	SLIDING GLASS DOOR
SH	SINGLE HUNG WINDOW
SHWR	SHOWER
SHT	SHEET
SIM	SIMILAR
SOF	SOFFIT
SC	SOLID CORE
SPEC	SPECIFICATION
SQ	SQUARE
STD	STANDARD
STL	STEEL
STRUCT	STRUCTURAL
SYS	SYSTEM
SHTG	SHEATHING
TV	TELEVISION
TEMP	TEMPERED / TEMPERATURE
THK	THICK (NESS)
THRES	THRESHOLD
T.R.	TO REMAIN
T&G	TONGUE AND GROOVE
T/O	TOP OF
TYP	TYPICAL
UND	UNLESS NOTED OTHERWISE
VER	VERTICAL
VEST	VESTIBULE
VIF	VERIFY IN FIELD
VP	VAPOR ROOF
VTR	VENT THROUGH ROOF
WC	WATER CLOSET
WP	WATER PROOF (ING)
w	WIDE / WIDTH
W/	WITH
WNDW	WINDOW
w/o	WITHOUT
WD	WOOD
WH	WATER HEATER
xo / xox	HORIZONTAL SLIDING WINDOW X = OPERABLE, O = FIXED
CT	WINDOW CASEMENT

CONSULTANTS

DRAFTING/DESIGN:PROCADESIGN LLC
GRADING AND DRAINAGE:SURVEY:REYES DC, LLC
MECHANICAL:MG ENGINEERING, LLC
GEO-TECHNICAL:SCOTT R. SMITH, P.E.
ELECTRICAL:ASF CONSULTANTS
PLUMBING: MG ENGINERING, LLC
STRUCTURAL: MODERN STRUCTURAL DESIGN
FIELD MANAGER:

BUILDING CODE

2018 INTERNATIONAL BUILDING CODES.(IBC)
2018 INTERNATIONAL RESIDENTIAL CODE (IRC)
2018 INTERNATIONAL EXISTING BUILDING CODE (IEBC)
2018 INTERNATIONAL ENERGY CONSERVATION CODE (IECC)
2018 INTERNATIONAL PLUMBING CODES (IPC)
2018 INTERNATIONAL FIRE CODE (IFC)
2017 NATIONAL ELECTRICAL CODE /NFPA-70

*WITH CITY OF PHOENIX CODES AND AMENDMENTS

ARCHITECTURAL SYMBOLS

SECTION INDICATOR
00 / X0 — SECTION INDICATOR; SHEET NUMBER
DETAIL REFERENCE
000 / XX — DETAIL NUMBER; SHEET NUMBER
ELEVATION NODE
9'-3 1/2" ± — ELEVATION HEIGHT
T.O.R. — ELEVATION LOCATION
NOTE MARKER
5 — NOTE INDICATOR; NOTE NUMBER
OFFSET REFERENCE
4" — DIFFERENCE IN FLOOR LEVEL

SUMMARY OF WORK

WHERE SPECIFIC INSTRUCTIONS IN THESE SPEC'S REQUIRE THAT A PARTICULAR PRODUCT AND/OR MATERIAL (S) BE INSTALLED AND/OR APPLIED BY AN APRV'D APPLICATOR OF THE MANUFACTURER, IT SHALL BE THE SUBCONTRACTOR'S RESPONSIBILITY TO ENSURE THE WORK BE DONE BY AND APPROVED APPLICATOR.

DIMENSION NOTE: IN GENERAL, DIMENSIONS ON ARCHITECTURAL SHEETS SHALL BE CONSIDERED ROUGH (NOT FINISHED) AND NOMINAL (NOT ACTUAL).
BUILDER SHALL BE RESPONSIBLE TO INTERPRET DIMENSIONING SO AS TO PROVIDED FOR CRITICAL FINISHED DIMENSIONS WHERE APPLICABLE, AND SHALL JUSTIFY PARTIAL DIMENSIONS STRINGS WITH OVERALL DIMENSION STRINGS.

ALL MATERIALS AND/OR SIZES ARE THOSE SPECIFIED BY EITHER THE BUILDER OR PROJECT ENGINEER. ALL DESIGNS, MATERIALS, & PROCEDURES ARE THOSE OF THE CLIENT AND OR BUILDER.
MINIMUM MATERIAL SPECIFICATIONS PER ATTACHED SHEET (S)

ALL REFERENCES TO AND DRAWINGS OF "EXISTING CONSTRUCTION" ARE BASED ON DRAWINGS PROVIDED TO TECHNE DESIGN BY OWNER

INDIVIDUAL SUB-CONTRACTORS AND/OR ENGINEERS SHALL BE SOLELY RESPONSIBLE FOR THE ACCURACY & CONSISTENCY OF THEIR RESPECTIVE CONSTRUCTION DOCUMENTS INCLUDED IN THIS SET.

DETAILS ON THE STRUCTURAL DRAWINGS ARE TYPICAL, NOTES AND DETAILS ON DRAWINGS SHALL TAKE PRECEDENCE OVER GENERAL NOTES AND TYPICAL DETAILS, WHERE NO DETAILS ARE SHOWN, CONSTRUCTION SHALL CONFORM TO SIMILAR WORK ON THE PROJECT.
VERIFY ALL DIMENSIONS WITH THE ARCHITECTURAL DRAWINGS.

ID	Revisions	Date

No Sheet	Sheet Description/Drawing Title			
	GENERAL DRAWINGS			
1 - CS	COVER SHEET			
2 - GAN	GENERAL ARCHITECTUAL NOTES			
	CIVIL DRAWINGS			
3 - A0	SITE PLAN			
	ARCHITECTURAL DRAWINGS			
4 - A1	FLOOR PLAN			
5 - A1.1	DIMENSIONAL FLOOR PLAN			
6 - A2	EXTERIOR ELEVATIONS			
7 - A3	BUILDING SECTIONS			
8 - A3.1	BUILDING SECTIONS			
9 - A4	ROOF PLAN			
10 - A5	REFLECTIVE CEILING PLAN			
	STRUCTURAL DRAWINGS			
11 - GSN	GENERAL STRUCTURAL NOTES			
12 - S1	FOUNDATION PLAN			
13 - S2	FRAMING PLAN			
14 - S3	BRACE PLAN			
15 - SD	STRUCTURAL DETAILS			
16 - SD	STRUCTURAL DETAILS			
17 - SD	STRUCTURAL DETAILS			
	MEP DRAWINGS			
18 - M1	MECHANICAL PLAN SPECIFICATIONS			
19 - M2	MECHANICAL FLOOR PLAN			
20 - M3	MECHANICAL IECC, ENERGY COMPLIANCE			
21 - E1	ELECTRIC LIGHTING PLAN			
22 - E2	ELECTRIC POWER PLAN			
23 - P1	PLUMBING SPECIFICATIONS, DETAILS AND SCHEDULES			
24 - P2.0	PLUMBING ENLARGED FLOOR PLAN			
25 - P2.1	PLUMBING ENLARGED FLOOR PLAN			
26 - P3	PLUMBING DWH-MVI SOMETRIC			
27 - P3.1	PLUMBING WASTE AND VENT ISOMETRIC			
28 - P3.2	PLUMBING GAS ISOMETRIC			

CITY OF PHOENIX
Planning and Development Department
BY: Justine Cornelius
05/11/2023
This set of plans has been reviewed for **PHOENIX CONSTRUCTION CODE** requirements prior to issuance of Building Permit and shall be kept at the construction site. Such review shall not prevent the Building Official from requiring correction of errors in the plans where such errors are subsequently found to be in violation of any law or ordinance.

THE INFORMATION CONTAINED ON THESE DRAWINGS SUCH AS DATA, DESIGNS, AND CONCEPTS, ARE PROPERTY OF PROCADESIGN LLC. AND SHALL NOT BE USED FOR ANY OTHER PURPOSE OTHER THAN ORIGINALLY INTENDED WITHOUT WRITTEN PERMISSION OF THE DESIGNER/CONSULTANT.

#	REVISIONS	DATE
1	CITY COMMENTS	12/12/2022
2	CITY COMMENTS	4/5/2023

DANCO RESIDENCE
4441 N JOKAKE DR SCOTTSDALE AZ 85251
172-29-017

DRAWN BY: PROCA DESIGN
CONTACT #
www.procadesign.net
(602) 606-2885
angelica@procadesign.com
DATE: OCT. 2020
SCALE: PER PLAN
SHEET: CS

GENERAL ARCHITECTURE NOTES

CARPENTRY

A. ALL EXTERIOR SILL PLATES SHALL BE PRESSURE TREATED OR FOUNDATION REDWOOD. EXTERIOR SILL PLATE SHALL BE SEAL AND BOLTED TO FOUNDATION WALL PER DETAILS.

B. ALL PRE-MANUFACTURED ROOF AND FLOOR TRUSSES SHALL CONFORM TO CURRENT CODES, ICB AND T.P.I. STANDARDS AND SHALL BE MANUFACTURED BY A CITY APPROVED FABRICATOR. TRUSS DRAWINGS SHALL BEAR THE SEAL OF AN ENGINEER HOLDING CURRENT REGISTRATION IN THE STATE OF ARIZONA. SEAL SHALL BE DATED WITHIN THE LATEST ADOPTED U.B.C. EDITION.

C. IT SHALL BE THE RESPONSIBILITY OF THE FABRICATOR OF THE STRUCTURAL UNITS TO DESIGN THE UNITS AND TO SUBMIT STRUCTURAL CALCULATIONS FOR APPROVAL. STRUCTURAL CALCULATIONS SHALL BEAR THE SEAL OF AN ENGINEER HOLDING CURRENT REGISTRATION IN THE STATE OF ARIZONA. SEAL SHALL BE DATED WITHIN LATEST CITY ADOPTED IRC.

D. LAMINATED WOOD BEAMS SHALL BE MANUFACTURED USING COAST REGION DOUGLAS FIR, WITH DESIGN AND FABRICATION CONFORMING TO STANDARD SPECIFICATIONS FOR STRUCTURAL GLUED LAMINATED DOUGLAS FIR LUMBER. LAMINATED BEAMS SHALL BE 24F-V4 FOR SIMPLE SPANS AND 24F-V8 FOR CANTILEVER SPANS, WITH ARCHITECTURAL FINISH AT INTERIOR APPLICATIONS AND ROUGH SAWN FINISH AT EXTERIOR APPLICATIONS. ALL SAWN LUMBER SHALL BEAR STAMP OF WWPA OR APPROVED TESTING AGENCY. ROOF JOISTS, FLOOR JOISTS, LEDGERS AND PLATES TO BE DOUGLAS FIT #2 OR BETTER. STUDS TO BE HEMLOCK FIR STUD GRADE OR BETTER. POSTS TO BE DOUGLAS FIR #2 OR BETTER. PLATE MATERIAL SHALL BE DOUGLAS FIR #2 OR BETTER. BEAMS AND HEADERS OF 2X OR 4X MATERIAL SHALL BE DOUGLAS FIR #2 OR BETTER.

E. ROOF SHEATHING SHALL BE 5/8" THICK 5 PLY CDX EXTERIOR PLYWOOD WITH EXTERIOR GLUE OR 5/8" THICK ORIENTED STRAND BOARD NER #108 OR EQUAL. ALL PANELS SHALL BE APA GRADE TRADEMARKED WITH A 32/16 SPAN INDEX. ALL JOINTS TO HAVE 2X BLOCKING, TYP.

F. ALL ROOF SHEATHING SHALL BE FASTENED WITH 8D COMMON AT 6" O.C. AT EDGES AND BOUNDARY. 8D AT 12" O.C. AT INTERMEDIATE FRAMING MEMBERS, OR 16 GAUGE X 1 3/4" LONG X 7/16" O.D. CROWN GALVANIZED WIRE STAPLES AT 4" O.C. AT EDGES AND BOUNDARY, AND 8" O.C. AT INTERMEDIATE. NER #272.

G. SUB-FLOOR-UNDERLAYMENT SHALL BE 3/4" THICK 6 PLY CC INTERIOR PLYWOOD WITH EXTERIOR GLUE OR 1 1/8" THICK ORIENTED STRAND BOARD NER #108 OR EQUAL. ALL PANELS SHALL BE APA GRADE TRADEMARKED WITH 48/24 SPAN INDEX.

H. SUB-FLOOR SHALL BE FASTENED WITH CONSTRUCTION ADHESIVE AND 10D NAILS AT 6" O.C. AT EDGES AND BOUNDARY, 10" O.C. AT INTERMEDIATE OR 16 GAUGE X 2 3/8" LONG X 7/16" O.D. CROWN GALVANIZED WIRE STAPLES AT 2 1/2" O.C. AT EDGES AND BOUNDARY AND 4" O.C. AT INTERMEDIATE. NER #272.

I. PLYWOOD DECKING FOR EXTERIOR BALCONIES SHALL BE APA GRADE TRADEMARKED, 1-1/8" EXTERIOR. PROVIDE GROUP-1, AC WHEN ANY DECK COATING IS APPLIED DIRECTLY TO PLYWOOD, GROUP-2, CC OTHERWISE.

J. ALL SHEATHING SHALL BE INSTALLED WITH STAGGERED JOINTS AND THE FACE GRAIN PERPENDICULAR TO FRAMING MEMBERS WITH A TWO SPAN MINIMUM.

K. TIES WILL BE REQUIRED AT ALL SPLICES ALONG THE FASCIA BOARD. A FASCIA TIE WILL CONSIST OF A 1"X3" (SIMPSON T-31) TRUSS PLATE (OR EQUIVALENT) APPLIED TO THE BOTTOM SIDE OF THE FASCIA BOARD. ALL COLUMNS AND CORNERS ARE TO HAVE 90 DEGREE SQUARE CORNERS WITH FLAT SURFACES FROM EDGE TO EDGE. NO INWARD OR OUTWARD BOWING ACROSS FLAT PORTIONS OF ANY COLUMN OR WALL. ANY SPLIT, WARPED OR TWISTED LUMBER SHALL BE CORRECTED OR REPLACED PRIOR TO COMPLETION OF FRAMING.

L. ALL LUMBER SHALL BEAR AN APPROVED GRADING STAMP.

CONCRETE

CONCRETE IN FOOTINGS, STEMS, FLOOR SLABS, WALKS AND DRIVES SHALL HAVE A COMPRESSIVE STRENGTH OF 2500 PSI AT 28 DAY MINIMUM UNLESS NOTED OTHERWISE. FOOTINGS SHALL BEAR ON FIRM UNDISTURBED SOIL OR ON ENGINEERED PAD CERTIFIED BY AN INDEPENDENT SOILS LAB - SEE DETAILS. CONCRETE COVERAGE FOR REINFORCING STEEL SHALL BE 3" MINIMUM. INTERIOR SLABS SHALL RECEIVE A SMOOTH TROWEL FINISH. EXTERIOR SLABS SHALL RECEIVE A "SALT" OR LIGHT "BROOM" FINISH. (U.N.O.) PROVIDE ANCHOR BOLTS PER FOUNDATION PLAN, SHEAR-WALL PLAN AND DETAILS. ALL FOUNDATION SIZES AND SLAB THICKNESS ARE PER DETAILS (U.N.O.). CONCRETE SLABS SHALL BE 4" THICK MINIMUM (U.N.O.). PROVIDE 4" MINIMUM 3/4" CRUSHED ROCK BASE COURSE UNDER ALL INTERIOR CONCRETE SLABS (U.N.O.). SLOPE OF LANDINGS AT ALL DOORS SHALL BE 1/4" PER FOOT MAXIMUM. PROVIDE CONTROL JOINTS AS SHOWN ON THE FOUNDATION PLAN OR AT 600 S.F. MAXIMUM. DO NOT LOCATE JOINTS THROUGH CERAMIC TILE OR VINYL FLOOR AREAS. SEAL ALL VOIDS AROUND PENETRATIONS THROUGH FLOOR SLABS.

DOOR AND WINDOW I

A. SECURITY DOORS ARE ALL EXTERIOR DOORS LEADING INTO A RESIDENCE INCLUDING SLIDING GLASS DOORS, GARAGE DOORS AND DOORS FROM GARAGE TO RESIDENCE.

B. ALL DOORS AND WINDOWS SHALL BE OF THE TYPES AND SIZES AS INDICATE ON THE FLOOR PLAN.

C. ALL OPERABLE WINDOWS AND SLIDING GLASS DOORS SHALL BE PROVIDED WITH INSECT SCREENS. THE HEIGHT OF THE DOORS IS INDICATED IN THE FLOOR PLAN, WITH 1-3/4" HOLLOW CORE AT INTERIOR AND 1-3/4" SOLID CORE AT EXTERIOR (U.N.O.).

D. ALL MAIN AND / OR FRONT DOORS OF ENTRY MUST HAVE A VIEWER THAT ALLOWS TO HAVE AN IMMEDIATE VIEW TO THE OUTSIDE AREA WITHOUT LEAVING FROM THE INSIDE OF THE HOUSE, OF NOT LESS THAN 180 DEGREES.

E. OPEN SPACE BETWEEN TRIMMERS AND WOOD EXTERIOR DOOR JAMBS SHALL BE SOLID SHIMMED EXTENDING NOT LESS THAN 8 INCHES ABOVE AND BELOW THE DEADBOLT STRIKE PLATE. DEADBOLT STRIKE PLATES FOR EXTERIOR DOOR LOCKS SHALL BE ATTACHED TO WOOD JAMBS WITH NOT LESS THAN 4-#8 BY 3" SCREWS OR, WHEN ATTACHED TO METAL JAMBS, SHALL BE ATTACHED WITH NO LESS THAN 4-#8 MACHINE SCREWS.

F. EXTERIOR DOORS WITH HINGE PINS EXPOSED ON THE OUTSIDE SHALL USE HINGES WITH NON-REMOVABLE PINS OR PIN STANDARD HINGES TO PREVENT REMOVAL OF THE DOOR FROM EXTERIOR BY REMOVAL OF THE DOOR FROM EXTERIOR BY REMOVAL OF THE HINGE PINS.

G. GLASS WITHIN 24" ARC OF A DOOR SHALL BE SAFETY GLASS (TEMPERED/IMPACT RESISTANT GLAZING).

H. WOOD PANEL DOORS SHALL HAVE A MINIMUM 4-5/8" STILE WIDTH" MAX. ABOVE THE FLOOR.

DOOR AND WINGOW II

A. ALL EXTERIOR SLIDING DOORS SHALL BE CONSTRUCTED AND INSTALLED OR EQUIPPED SO AS TO PROHIBIT THE RAISING, SLIDING OR REMOVAL OF THE SLIDING SECTION FROM THE TRACK WHILE IN THE CLOSED AND LOCKED POSITION. THE STATIONARY SECTION SHALL NOT BE REMOVABLE FROM THE OUTSIDE. SUCH SLIDING DOORS SHALL BE PROVIDED WITH AN AUXILIARY OR ADDITIONAL LOCKING DEVICE OPERABLE FROM THE INSIDE WITHOUT THE USE OF A KEY OR SPECIAL KNOWLEDGE OR EFFORT.

B. THE DOORS OF A HOUSING UNIT TO AN ATTACHED GARAGE ARE ALSO CONSIDERED OUTDOOR DOORS. THIS DOOR MUST BE AGAINST 20 MIN. FIRE, 1 3/8 "THICKNESS WITH AUTOMATIC CLOSURE DEVICE, MOUNTING AND SWEEPING JOINT.

C. HOLLOW CORE DOORS SHALL BE SEVEN-PLY WITH CORES COMPOSED OF SPIRALS CUT FROM PRIME LUMBER AND PLACED TANGENT TO ONE ANOTHER. BOND ALL DOORS WITH WATER RESISTANT ADHESIVE AND 1/2" THICK EDGE STRIPS.

D. THE ACTIVE LEAF OF A PAIR OF DOORS SHALL BE EQUIPPED WITH A DEAD BEAD-BOLT WITH A LOCK THAT IS KEY OPERATED FROM THE EXTERIOR. LOCKS SHALL ENGAGE OR DISENGAGE FROM THE INTERIOR SIDE OF THE DOOR BY A DEVICE NOT REQUIRING A KEY OR SPECIAL KNOWLEDGE OR EFFORT.

E. THE GARAGE DOORS ARE EQUIPPED WITH ONE OF THE FOLLOWING TYPES: CYLINDER LOCK; OR ELECTRIC DOOR OPERATOR WITH AUTOMATIC LOCK. THESE LOCKS WILL BE OPERABLE FROM THE INSIDE WITHOUT THE USE OF KEY OR ELECTRICAL ENERGY.

D. FINISH AND INSTALL ALL FINISH HARDWARE AS SELECTED AND AS REQUIRED. PROVIDE SECURITY HARDWARE AS FOLLOWS:. EXTERIOR SWINGING DOORS MUST BE SOLID CORE OR METAL SKIN CONSTRUCTION 1-3/4" THICK WITH 4-5/8" MINIMUM STYLE WIDTH WITH JAMBS SHIMMED SOLID FOR SIX INCHES (6") ABOVE AND BELOW THE LOCK STRIKE PLATE. IF HINGES ARE ON THE OUTSIDE, THEY MUST HAVE NON REMOVABLE PINS OR BE PIN STANDARD HINGES

E. ACCESS TO ATTIC MAY BE LOCATED WITHIN HOUSING OR GARAGE. IF THE ATTIC ACCESS DOOR IS IN THE GARAGE, YOU MUST HAVE A MINIMUM 5/8 "GYP. TYPE" X ". EXCEPT THAT ACCESS TO THE ATTIC CANNOT BE INSIDE YOU SHOULD PROVIDE ACCESS OUTSIDE WITH A DOOR SECURITY WITH STEEL COVER AND A HEAVY DUTY LOCK.

F. ALL DOORS AND OPERABLE WINDOWS PROVIDING ACCESS TO THE BUILDING SHALL BE FITTED WITH A LOCKING SECURITY DEVICE AS DESIGNATED ON THE PLANS AND DRAWINGS.

G. GLASS AND GLAZING WHERE SEPARATED FROM A DOOR TO GLASS IS LESS IS LESS THAN 24" WHERE GLASS SIDELIGHTS OCCUR ADJACENT TO WALKING SURFACES, AND IS LESS THAN 18" ABOVE FINISHED FLOOR, AND NOT PROTECTED BY A RAILING WHERE GLAZING OCCURS AT SHOWER DOORS AND BATH ENCLOSURES WHERE GLAZING OCCURS IN BATHROOMS WHERE THE LOWER EDGE IS LESS THAN 60" ABOVE FINISHED FLOOR. SLIDING GLASS DOOR.

H. ALL EXITS TO BE OPERABLE FROM THE INSIDE WITHOUT USE OF A KEY OR SPECIAL KNOWLEDGE.

I. MANUALLY OPERATED EDGE OR SURFACE-MOUNTED FLUSH BOLTS AND SURFACE BOLTS ARE PROHIBITED AT A DOOR OR THE ACTIVE LEAF OF A PAIR OF DOORS.

J. EMERGENCY & RESCUE OPENINGS AT SLEEPING AREAS: NET CLEAR OPENING: 5.7 SQ FT MIN; NET CLEAR OPENING HEIGHT: 24" MIN.; NET CLEAR OPENING WIDTH: 20" MIN.; WINDOW SILL HEIGHT 44" MAX. ABOVE THE FLOOR.

DRYWALL

PROVIDE 1/2" GYP. BOARD AT WALLS THROUGHOUT (U.N.O.). PROVIDE 5/8" TYPE "X" FIRE CODE GYP. BOARD AT GARAGE CEILING AND WALLS COMMON TO HOUSE (AND BEARING WALLS) UNLESS NOTED OTHERWISE. AT CEILINGS PROVIDE 1/2" GYP. BD. WHEN FRAMING MEMBERS ARE 16" O.C. OR 5/8" WHEN MEMBERS ARE 24" O.C. OR USE PLAYABLE 1/2" SAG-RESISTANT GYPSUM CEILING BOARD. GYPSUM BOARD USED AT EXTERIOR LOCATIONS SHALL BE EXTERIOR TYPE (APPROVED PER I.C.C. ESR-3365). ALL GYPSUM BOARD SHALL BE NAILED WITH A FULL NAILING PATTERN AND FINISHED IN ACCORDANCE WITH THE MANUFACTURER'S RECOMMENDATIONS. ALL ENDS AND EDGES OF WALL BOARD SHALL OCCUR OVER AND BE NAILED TO SUPPORTS. NAIL SPACING SHALL CONFORM TO TABLE 25-G U.B.C. AND SHEAR-WALL SCHEDULE. MINIMUM NAIL EDGE DISTANCE SHALL BE 3/8". THIS SHALL APPLY TO BOTH CEILING AND WALL INSTALLATION. DRYWALL SHIMS SHALL BE USED WHERE NECESSARY. OPENINGS CUT FOR OUTLETS, SWITCHES, ETC, SHALL BE OF A TOLERANCE THAT CAN BE COVERED ADEQUATELY WITH NORMAL SWITCH PLATES AND COVERS WITHOUT ADDITIONAL TAPING. DRYWALL SHALL NOT BE INSTALLED WITHOUT PROPER BACKING. ALL EXTERIOR CORNERS ON DRYWALL SHALL BE COVERED WITH NON-CORROSIVE METAL CORNER BEAD AND COVERED WITH AN ACCEPTABLE INSTALLATION OF JOINT COMPOUND. DRYWALL RETURNS, COMPLETE WITH NON-CORROSIVE METAL CORNER BEADS SHALL BE INSTALLED AT TOP AND SIDES OF ALL BI-FOLD AND BI-PASS DOOR OPENINGS, (IF NECESSARY), WALL CORNERS AND OPENINGS, AND COVERED WITH AN ACCEPTABLE INSTALLATION OF JOINT COMPOUND. PROVIDE ROUNDED CORNER BEAD (U.N.O.).

WATER-RESISTANT GYPSUM BOARD SHALL NOT BE INSTALLED OVER VAPOR RETARDED IN A SHOWER OR TUB COMPARTMENT, ALSO INCLUDES AREAS SUBJECT TO CONTINUOUS HIGH HUMIDITY. CEMENT, FIBER-CEMENT OR GLASS MAT GYPSUM BACKERS INSTALLED IN ACCORDANCE WITH MANUFACTURE'S RECOMMENDATIONS SHALL BE USED AS BACKERS FOR WALL TILE IN TUB AND SHOWER AREAS AND WALL PANELS IN SHOWER AREAS.

ELECTRIC

ELECTRICAL PANEL SHALL BE 200 AMP., 120-240 VOLT, 20 CIRCUIT BREAKER PANEL EQUIPPED WITH BREAKERS ON ALL ACTIVATED CIRCUITS (U.N.O.) - SEE ELECTRICAL DRAWING. PROVIDE 20' #4 COPPER WIRE AT FOOTING FOR UFER. SMOKE DETECTORS SHALL BE PROVIDED AS NOTED PER CURRENT CODE. SEE ELECTRICAL PLAN. GROUND-FAULT CIRCUIT-INTERRUPTER PROTECTION SHALL BE PROVIDED AS NOTED. SEE ELECTRICAL PLAN. ALL ELECTRICAL OUTLETS AND SWITCHES SHALL BE LOCATED TO COMPLY WITH CURRENT CODES. ALL EXTERIOR FIXTURES SHALL BE U.L. APPROVED FOR WET LOCATIONS. ELECTRICAL BOXES AT CEILING FAN OUTLETS SHALL BE LISTED FOR THE APPLICATION/LOCATION AND SHALL BE RIGIDLY SECURED IN PLACE. TWO OR MORE 20 AMPERE SMALL APPLIANCE CIRCUITS SHALL BE PROVIDED TO SERVE THE KITCHEN, BREAKFAST AND DINING ROOM. THESE CIRCUITS SHALL HAVE NO OTHER OUTLETS. ALL OTHER CIRCUITS SHALL BE RATED AT 15 AMPS. AND EQUIPPED WITH 14 GAUGE COPPER (U.N.O.). CONDENSING UNIT DISCONNECT REQUIRES WORKING CLEARANCES AND ACCESS. AT LEAST ONE 20 AMPERE BRANCH CIRCUIT SHALL BE PROVIDED TO SERVE THE LAUNDRY ROOM. THIS CIRCUIT SHALL HAVE NO OTHER OUTLETS. ALUMINUM WIRE TO BE USED ONLY WHERE PERMITTED BY CODE I.E., 220 VOLT LOCATIONS. PROVIDE G.F.C.I. OUTLET FOR JACUZZI PUMP.

ENERGY EFFICIENCY

ENVELOPED AREAS SHALL COMPLY WITH THE FOLLOWINGS: FENESTRATION=0.40 MAX U-FACTOR,0.25 MAX SHGC. MIN R-13 AT FRAME WALLS AND FLOORS R-6 @ MASS WALL, R-38 CEILINGS. DUCT INSULATION LOCATED OUTSIDE THE BUILDING ENVELOPE REQUIRES MINIMUM R-8 AND R-6 WHEN LOCATED IN FLOOR JOISTS. MINIMIZE AIR LEAKAGE.

GENERAL

ALL CONSTRUCTION SHALL CONFORM TO THE APPLICABLE BUILDING CODES AND TO ALL REQUIREMENTS AND REGULATIONS OF THE CITY, COUNTY, STATE AND/OR OTHER GOVERNING AGENCY HAVING JURISDICTION. ALL WORKMANSHIP AND MATERIAL SHALL BE FULLY GUARANTEED FOR A MINIMUM PERIOD OF ONE YEAR FROM THE TIME OF SUBSTANTIAL COMPLETION AND ACCEPTANCE BY THE OWNER. SUBMIT ALL WARRANTIES, INSTRUCTIONS, OPERATION MANUALS, ETC., TO THE OWNER BEFORE FINAL PAYMENT. CONTRACTOR SHALL PROVIDE ALL TEMPORARY BRACING, SHORING, GUYING OR OTHER MEANS TO AVOID EXCESSIVE STRESSES AND TO HOLD STRUCTURAL ELEMENTS IN PLACE DURING ERECTION. IT IS THE RESPONSIBILITY OF THE CONTRACTOR TO CLEAN UP ALL PACKAGING CARTONS, CONTAINERS, TRASH AND DEBRIS UPON COMPLETION OF WORK. IT IS THE RESPONSIBILITY OF ALL CONTRACTORS TO NOTIFY GENERAL CONTRACTOR OF ANY DISCREPANCIES FOUND IN THE FIELD. PLEASE CONTACT GENERAL CONTRACTOR WITH ANY CORRECTIONS TO THIS SET OF PLANS. A HOUSE NUMBER SHALL BE DISPLAYED IN A PROMINENT MANNER SO IT IS REASONABLY VISIBLE TO EMERGENCY VEHICLES TO LOCATE THE RESIDENCE. MATERIAL, LOCATION AND MOUNTING HEIGHT PER GENERAL CONTRACTOR INSTALL PRIOR TO FINAL INSPECTION.

INSULATION

INSTALL INSULATION AT ALL CEILING AREAS AND/OR ROOF AREAS AND ALL VERTICAL WALLS AS INDICATED ON THE DRAWINGS AND AT AREAS MINIMUM INSULATION SHALL BE PROVIDED AS FOLLOWS: NECESSARY TO PROPERLY INSULATE THE BUILDING TO FORM A TIGHT, CONTINUOUS ENVELOPE AT ALL CONDITIONED SPACES. CERTIFY INSULATION VALUES BY PLACING CERTIFICATION CARDS IN GARAGE, SPECIFYING NUMBER OF BAGS OF BLOW, AREA OF COVERAGE, THICKNESS OF INSULATION (SETTLED DENSITY) AND R-FACTORS OF WALLS, CEILINGS, ETC. INSULATION AT ROOF AND WALLS TO BE "ICYNENE" OR SIMULAR TO MEET R-VALUE REQUIREMENTS.

- FRAME WALLS: R13 MINIMUM
- MASONRY WALLS: R11 MINIMUM
- CEILINGS: R38 MINIMUM BLOW CELLULOSE AT FLAT CEILING (WHERE FEASIBLE); R38 MINIMUM AT VAULTED AREAS

MECHANICAL

ALL FURNACE AND AIR CONDITIONERS SHALL HAVE A S.E.E.R. RATING OF 14.00 OR BETTER ON ALL SIZE UNITS. ALL AIR CONDITIONING AND HEATING SYSTEMS SHALL BE DESIGNED, SIZED AND INSTALLED BY THE SUBCONTRACTOR TO MAINTAIN A MINIMUM INTERIOR TEMPERATURE OF 68° (DEGREES) F. AIR REGISTERS SHALL BE OF CLOSEABLE TYPE LOCATED PER PLAN. RETURN AIR GRILLES SHALL ALSO BE LOCATED PER PLAN. ALL REGISTERS FOR WALLS AND CEILINGS ARE TO BE WHITE IN COLOR. PROVIDE 4" ROUND DRYER VENT AND INSTALLATION AS SHOWN ON FLOOR PLAN. INSTALL EXHAUST FAN HOUSING (SUPPLIED BY ELECTRICIAN) AND VENT AND DUCT FROM VENTED RANGE HOOD OR MICROWAVE. SEAL AND CAULK DUCTS WHERE THEY PENETRATE FRAMING MEMBERS AND FINISH MATERIALS. MECHANICAL CONTRACTOR TO MAKE FINAL CONNECTIONS FOR CONDENSATION LINES AT ALL AIR HANDLER UNITS. ALL MECHANICAL EQUIPMENT INSTALLED IN ATTIC SHALL COMPLY PER CURRENT CODES. MECHANICAL EQUIPMENT SHALL NOT BE VISIBLE FORM THE PUBLIC STREET. ALL EXHAUST FANS SHALL PROVIDE FIVE AIR CHANGES PER HOUR MINIMUM. COMBUSTION AIR REQUIREMENTS AND VENTILATION FOR INSTALLED GAS APPLIANCES SHALL COMPLY PER CURRENT CODES INCLUDING BUT NOT LIMITED TO WATER HEATERS, FIREPLACES, ETC. - VENT WITH APPROVED DOUBLE WALL SYSTEM. ALL DUCTWORK IN GARAGE SHALL BE MINIMUM 26 GAUGE WITH NO VIBRATION ISOLATION MATERIAL IN DUCT.

- AIR SUPPLY DUCTS SHALL BE INSTALLED TO A MINIMUM R-4.2 IN CONDITIONED SPACES AND R-8 IN UNCONDITIONED SPACES.
- REFRIGERANT PIPING SHALL BE INSULATED TO A MINIMUM R-2.

PAINT

ALL EXTERIOR WOOD AND OTHER UNPRIMED TRIM SHALL RECEIVE TWO (2) COATS OF EXTERIOR GRADE PAINT. THE FIRST COAT (PRIME COAT) SHALL BE A SEPARATE OPERATION. PRIME COAT SHALL BE APPLED WITHIN SEVEN (7) DAYS OF COMPLETION OF EXTERIOR TRIM. EXTERIOR SECTIONS OF EXPOSED EXTERIOR SHEET METAL INCLUDING ACCESS PANELS, HEAT PUMPS AND AIR CONDITIONING DUCT, ROOF VENTS, FLASHING, GUTTERS AND DOWN-SPOUTS TO BE PAINTED ON (1) COAT OF METAL PRIMER AND ONE (1) COAT OF EXTERIOR LATEX. ALL SHEET METAL ITEMS AND EXPOSED PLASTIC PIPE LOCATED ON THE ROOF SHALL BE PAINTED A COLOR TO MATCH THE ROOF. COLOR SELECTION BY BUILDER. IMMEDIATELY AFTER INSTALLATION, THE GARAGE SERVICE DOOR AND FRENCH DOORS SHOULD BE PRIMED INSIDE, OUTSIDE AND ALL EDGES. IN ADDITION, IT SHOULD BE FINISHED WITH TWO (2) COATS OF HIGH QUALITY EXTERIOR PAINT ON ALL SURFACES. PRE-MANUFACTURED ITEMS SHALL BE TOUCHED UP AS NECESSARY, (I.E. CABINETS, DOORS, ZERO CLEARANCE FIREPLACES, AIR REGISTERS, LIGHT FIXTURES, ETC.). ALL BATHROOMS, KITCHEN WALLS, AND CEILINGS WILL BE PAINTED SEMI-GLOSS ENAMEL (U.N.O.). ALL OTHER WALLS AND CEILING AREAS WILL BE PAINTED FLAT LATEX ENAMEL (U.N.O.). ALL INTERIOR WOODWORK SUCH AS DOORS, BASE, CASING, ETC., SHALL BE PAINTED LATEX ENAMEL (HIGH GLOSS) (U.N.O.). THE TOP AND BOTTOM OF EACH DOOR MUST BE PAINTED AT THE SAME TIME AS THE REST OF THE HOUSE. ALL EXTERIOR PAINT SHALL BE LATEX. ALL WOODWORK SHALL BE SANDED BEFORE PAINTING AND BETWEEN COATS OF PAINTS. ALL INTERIOR BASE, CASING, SHELVING (TOP AND BOTTOM), ETC. SHALL BE CAULKED AND NAIL HOLES FILLED. CAULK OR OTHERWISE SEAL AROUND ALL OPENING IN THE EXTERIOR ENVELOPE OF THE HOME, AT ALL JOINTS BETWEEN DISSIMILAR MATERIALS AND AT JUNCTIONS OF MAJOR COMPONENTS, SUCH AS WALL TO FLOOR. CAULKING SHALL BE A SILICONE BASE OR BUTYL RUBBER BASE, CONFORMING TO FEDERAL SPECIFICATIONS (TT-9-1543 AND TT-S-1657).

PLUMBING

A. ALL DIRECT WASTE AND VENTING IS TO BE "ABS".

B. ALL COPPER TUBING IN WATER PIPING ABOVE SLAB TO BE A MIN. TYPE 'M', & MIN. TYPE 'L' BELOW SLAB & INSTALLED W/O JOINTS.

C. KITCHEN SINK TO HAVE DIRECT LINE TO HOT WATER HEATER.

D. SHOWER & SHOWER TUB COMBINATION SHALL BE PROVIDED BY PRESSURE BALANCE OR THERMOSTATIC MIXING VALVE TYPE.

E. ISLAND SINKS SHALL BE VENTED IN COMPLIANCE W/ IRC

F. WHERE LOCAL STATIC WATER PRESSURE IS IN EXCESS OF 80 POUNDS PER SQUARE INCH, AN APPROVED TYPE PRESSURE REGULATOR PRECEDED BY AN ADEQUATE STRAINER SHALL BE INSTALLED AND THE STATIC PRESSURE REDUCED TO 80 POUNDS PER SQUARE INCH OR LESS. FOR POTABLE WATER SERVICES UP TO AND INCLUDING 1-1/2" REGULATORS, PROVISION SHALL BE MADE TO PREVENT PRESSURE ON THE BUILDING SIDE OF THE REGULATOR FROM EXCEEDING MAIN SUPPLY PRESSURE. APPROVED REGULATORS WITH INTEGRAL BYPASSES ARE ACCEPTABLE. EACH SUCH REGULATOR AND STRAINER SHALL BE ACCESSIBLY LOCATED AND SHALL HAVE THE STRAINER READILY ACCESSIBLE FOR CLEANING WITHOUT REMOVING THE REGULATOR OR STRAINER BODY OR DISCONNECTING THE SUPPLY PIPING. ALL PIPE SIZE DETERMINATIONS SHALL BE BASED ON 80 PERCENT OF THE REDUCED .

G. UNDERGROUND GAS PIPING SYSTEMS SHALL BE ISOLATED FROM ABOVE GROUND SYSTEMS BY AN APPROVED ISOLATION FITTING INSTALLED AT LEAST 6" ABOVE GRADE.

H. WATER SERVICE PIPE SHALL BE INSTALLED NOT LESS THAN 12" DEEP AND NOT LESS THAN 6" BELOW THE FROST LINE

I. THE ANNULAR SPACE BETWEEN THE OUTSIDE OF A PIPE AND THE INSIDE OF A PIPE SLEEVE OR BETWEEN THE OUTSIDE OF A PIPE AND AN OPENING IN A BUILDING ENVELOPE WALL, FLOOR OR CEILING ASSEMBLY PENETRATED BY A PIPE SHALL BE SEALED WITH CAULKING MATERIAL OR FOAM SEALANT OR CLOSED WITH A GASKETING SYSTEM.

J. BATHTUBS SHALL BE EQUIPPED WITH A WASTE OUTLET AND AN OVERFLOW OUTLET. THE OUTLETS SHALL BE CONNECTED TO WASTE TUBING OR PIPING NOT LESS THAN 1-1/2" IN DIAMETER.

K. HOSE BIBS SHALL BE INSTALLED WITH A BACKFLOW PREVENTION DEVICE. PROVIDE ONE EXPANSION CHAMBER PER LINE. PROVIDE 3/4" TEE WITH 3" CAPPED STUB AT FRONT HOSE BIBB. TEE SHALL BE INSTALLED ON THE STREET SIDE OF THE SHUT OFF VALVE.

L. THE POTABLE WATER SUPPLY TO LAWN IRRIGATION SYSTEMS SHALL BE PROTECTED AGAINST BACKFLOW BY A BACKFLOW PREVENTION DEVICE.

M. WALLS AND FLOOR FRAMING ENCLOSING ON-SITE BUILT-UP SHOWER RECEPTORS SHALL BE INSTALLED WITH A PLASTIC LINER THAT COMPLIES WITH ASTM D 4068

N. PLUMBING FIXTURES TO COMPLY WITH LOW FLOW FIXTURE ORDINANCE & INCLUDE THE FOLLOWING.

O. WATER HEATERS

  O.A. 40-GALLON STORAGE-TYPE MIN WITH ENERGY FACTOR.

  O.B. WATER HEATERS SHALL BE INSTALLED IN ACCORDANCE WITH THE MANUFACTURER'S INSTRUCTIONS

  O.C. GAS-FIRED WATER HEATERS SHALL COMPLY WITH THE REQUIREMENTS IN CHAPTER 24.

  O.D. THE WATER HEATER OR HOT WATER STORAGE MUST BE PROTECTED BY A COMBINATION TEMPERATURE AND PRESSURE RELIEF VALVE (T&P) SYSTEM WHICH MUST MEET THE REQUIREMENTS FOR SEPARATE PRESSURE RELIEF VALVES AND TEMPERATURE. . THE VALVES TO BE INSTALLED SO THAT THE BUILDING SUPPLY PRESSURE IS LESS THAN THE REQUIRED RELIEF VALVE PRESSURE SETTING. NO DEVICE SHALL BE INSTALLED THAT PREVENTS PRESSURE RELIEF THROUGH BUILDING SUPPLY.

  O.E. WHEN A STORAGE TANK TYPE WATER HEATER OR HOT WATER STORAGE TANK IS INSTALLED IN A LOCATION WHERE WATER LEAKS FROM THE TANK WILL CAUSE DAMAGE, THE TANK WILL BE INSTALLED WITH A GALVANIZED STEEL PAN HAVING A MINIMUM THICKNESS OF 24 GAUGE NOT LESS THAN 1-1 / 2 INCHES DEEP AND SHALL BE OF SUFFICIENT SIZE AND SHAPE TO RECEIVE DRIP OR CONDENSATE FROM THE TANK OR WATER HEATER. THE TRAY SHOULD BE DRAINED VIA AN INDIRECT DRAIN PIPE OF NO LESS THAN 3/4 INCH AND THE DRAIN FROM THE TRAY EXTEND TO THE EXTERIOR OF THE BUILDING AND TERMINATE NOT LESS THAN 6 INCHES (152 MM) AND NOT MORE THAN 24 INCHES (610 MM) ABOVE THE ADJACENT GROUND SURFACE

  O.F. WATER HEATERS INSTALLED IN GARAGES. WATER HEATERS HAVING AN IGNITION SOURCE SHALL BE ELEVATED WHIT NON-COMBUSTIBLE PLATFORMS 32 IN SQ X 18 INCHES MIN. ABOVE THE GARAGE FLOOR.

SITE WORK

ALL EXISTING FINISHED PUBLIC SIDEWALKS, CURBS, STREETS, UTILITIES AND GRADE ELEVATIONS DISTURBED OR DAMAGED BY THE CONTRACTOR SHALL BE RESTORED TO PROPER QUALITY AS A PART OF THIS CONTRACT. STRIP AND REMOVE: ALL VEGETATION, ANY EXISTING DEBRIS OR RUBBLE, ALL EXISTING FILL ZONES OR STOCKPILE AND ANY OBVIOUSLY LOOSE SURFACE SOILS. SURFACE FILLS MAY BE CONSTRUCTED WITH ON-SITE NATIVE SOILS PROVIDED THEY ARE PLACED AND MAINTAINED AT MOISTURE CONTENTS BETWEEN OPTIMUM AND OPTIMUM PLUS 2%. IMPORTED SOILS MAY BE USED IF THEY EXHIBIT LOW EXPANSION CHARACTERISTICS. PROVIDE TERMITE PROTECTION UNDER ALL CONCRETE FLOOR SLABS. CONCENTRATION SHALL NOT BE LESS THAN: TORPEDO 0.5%, DEMON T.C. 0.25% TO 0.5% OR DRAGNET 0.5%.

SUPPLEMENTARY NOTES

VERIFY ALL DIMENSIONS AND CONDITIONS PRIOR TO STARTING WORK. NOTIFY THE DESIGNER OF ANY DISCREPANCIES OR INCONSISTENCIES. VERIFY IN FIELD ALL EXISTING CONDITIONS SHOWN ON DRAWINGS. VERIFY ALL DIMENSIONS WITH THE ARCHITECTURAL DRAWINGS. ESTABLISH AND VERIFY ALL OPENINGS AND INSERTS FOR MECHANICAL, ELECTRICAL AND PLUMBING WITH APPROPRIATE TRADES DRAWINGS. PROVIDE ALL MEASURES NECESSARY TO PROTECT THE STRUCTURES DURING CONSTRUCTION. SUCH MEASURES SHALL INCLUDE, BUT NOT BE LIMITED TO, BRACING AND SHORING FOR LOADS IMPOSED DURING CONSTRUCTION, ETC. OPTIONS ARE FOR THE CONTRACTOR'S CONVENIENCE. CONTRACTOR SHALL BE RESPONSIBLE FOR ALL CHANGES NECESSARY IF CONTRACTOR CHOOSES AN OPTION AND SHALL COORDINATE ALL DETAILS. THE COST OF ADDITIONAL DESIGN WORK DUE TO ERRORS OR OMISSIONS IN CONSTRUCTION SHALL BE BORNE BY THE CONTRACTOR. ANY ENGINEERING DESIGN PROVIDED BY OTHERS AND SUBMITTED FOR REVIEW SHALL BEAR THE SEAL AND SIGNATURE OF AN ENGINEER REGISTERED IN ARIZONA. DETAILS ON THE STRUCTURAL ARE TYPICAL. NOTES AND DETAILS ON DRAWINGS SHALL TAKE PRECEDENCE OVER GENERAL NOTES AND TYPICAL DETAILS. WHERE NO DETAILS ARE SHOWN, CONSTRUCTION SHALL CONFORM TO SIMILAR WORK ON THE PROJECT. ALL PRODUCTS LISTED BY I.C.B.O./N.E.R.. NUMBER(S) SHALL BE INSTALLED PER THE REPORT AND MANUFACTURER'S WRITTEN INSTRUCTIONS. PRODUCT SUBSTITUTION(S) FOR PRODUCT(S) LISTED SHALL ALSO HAVE I.C.B.O. APPROVED EVALUATION REPORT(S) OR BE APPROVED AND LISTED BY OTHER NATIONALLY RECOGNIZED AGENCIES. ELECTRICAL, MECHANICAL AND PLUMBING DRAWINGS ARE NOT REVIEW- ED NOT APPROVED BY PLAN REVIEW PROCESS FOR RESIDENTIAL CONSTRUCTION. HOWEVER, CODE REQUIREMENTS STILL MUST BE SATISFIED. ENFORCEMENT SHALL BE PROVIDED BY THE CORRESPONDENT JURISDICTION FIELD INSPECTOR'S. FINISH FLOOR ELEVATION (AS-BUILT) SHALL BE CERTIFIED BY THE CITY FOR FEDERAL EMERGENCY MANAGEMENT ASSOCIATION (F.E.M.A.) WHERE REQUIRED. MISCELLANEOUS SITE STRUCTURES, SWIMMING POOLS, SPAS, FENCES, SITE WALLS (INCLUDING RETAINING WALLS), AND GAS STORAGE TANKS REQUIRED SEPARATE PERMITS. ALL MECHANICAL EQUIPMENT (AIR CONDITIONING, POOL EQUIPMENT, ETC.) SHALL BE SCREENED A MINIMUM OF ONE (1) FOOT HIGHER THAN HIGHEST PORTION OF THE EQUIPMENT, AND SHALL BE COMPATIBLE WITH THE ADJACENT MAIN BUILDING. PROVIDE FIRE SPRINKLER SYSTEM PER MUNICIPALITY CODE / ORDINANCE.

STUCCO SYSTEM

"STOPOWERWALL" STUCCO SYSTEM OR EQUAL SHALL BE INSTALLED DIRECTLY OVER OPEN FRAMING WITH STUDS SPACED A MAXIMUM OF 16" ON CENTER. PLACE STYRENE BOARD, 2X8 OR 4X8, HORIZONTALLY WITH TONGUES OR LAPS UPWARD TO PREVENT WATER PENETRATION OVER MINIMUM (1) LAYER GRADE "D" BUILDING PAPER OR (1) LAYER TYPE 15 FELT BUILDING PAPER. ALL VERTICAL JOINTS MUST OCCUR ON STUDS. SHEATHING IS TEMPORARILY HELD IN PLACE WITH 1 1/2" LONG ROOFING NAILS OR EQUIVALENT. APPLY A 1" NO. 20 GAUGE GALVANIZED WIRE FABRIC TIGHTLY OVER THE STYRENE BOARD SURFACE AND STAPLE OR NAIL IN ACCORDANCE WITH THE CODE AT EACH STUD AND ALL PLATES. ALL FASTENERS MUST BE LONG ENOUGH TO PENETRATE THE FRAMING MEMBERS 3/4". APPLY THE STUCCO MIXTURE TO A MINIMUM THICKNESS OF 3/8" WITH MEDIUM TROWEL PRESSURE. PROVIDE GALVANIZED METAL OR APPROVED PLASTIC 3 1/2" J-SHAPED TRIM. PIECES ARE USED AT WINDOWS WHERE FOAM WOULD BE LEFT EXPOSED. IF J-TRIM PIECES ARE USED AT WINDOWS AND DOORS ABUTTING, METAL EDGES SHALL BE CAULKED WITH DAP ACRYLIC LATEX NO. 11465, TREMCO CAULKING, OR OTHER APPROVED EQUAL. SEAL OPENINGS AROUND HOSE BIBBS, ELECTRICAL PANELS OR ANY HOLES IN THE SUBSTRATE SURFACE WITH A SPRAY TYPE URETHANE TO PREVENT MOISTURE PENETRATION. COVER OUTSIDE CORNERS WITH METAL CORNER REINFORCEMENT. COVER INSIDE CORNERS WITH 2" NYLON MESH TAPE STAPLED TO THE SHEATHING AND SEALED WITH AN EXTERIOR JOINT COMPOUND. PROVIDE EXPANSION JOINTS IN ACCORDANCE WITH LOCAL ACCEPTED PRACTICES. "STOPOWERWALL" STUCCO SYSTEM SHALL BE INSTALLED IN ACCORDANCE WITH I.C.C. ESR-2323. INSULATION BOARD SHALL BE TYPE II EXPANDED POLYSTYRENE (E.P.S.) I.C.C. ESR-3228. ALL FOAM APPLICATIONS SHALL COMPLY TO CURRENT CODES WEATHER RESISTIVE BARRIER APPLICATION SHALL COMPLY TO CURRENT CODES. PROVIDE 26 GAUGE G.I. WEEP SCREED 3/4" BELOW BOTTOM PLATE AND 5 1/4" MINIMUM ABOVE FINISHED GRADE. PROVIDE 1/2" ASPHALT IMP. SHEATHING IN LIEU OF FOAM AT ALL ATTIC AREAS AND GARAGE WALLS. THE BUILDING SAFETY DEPARTMENT WILL REQUIRE THE INSTALLATION CARD FROM THE STUCCO MANUFACTURER APPROVED APPLICATIONS BE ON THE JOB BEFORE THE APPLICATION OF THE WEATHER-RESISTIVE BARRIER. A COPY OF THE INSTALLATION CARD MUST BE PRESENTED TO THE BUILDING INSPECTOR AFTER THE COMPLETION OF WORK AND BEFORE FINAL INSPECTION AND THE INSTALLATION CARD SHALL BE LEFT AT THE JOBSITE FOR THE HOMEOWNER. STUCCO IS INTEGRALLY COLORED.

CITY OF PHOENIX
Planning and Development Department
BY: Justine Cornelius
05/11/2023
This set of plans has been reviewed for PHOENIX CONSTRUCTION CODE requirements prior to issuance of Building Permit and shall be kept at the construction site. Such review shall not prevent the Building Official from requiring correction of errors in the plans where such errors are subsequently found to be in violation of any law or ordinance.

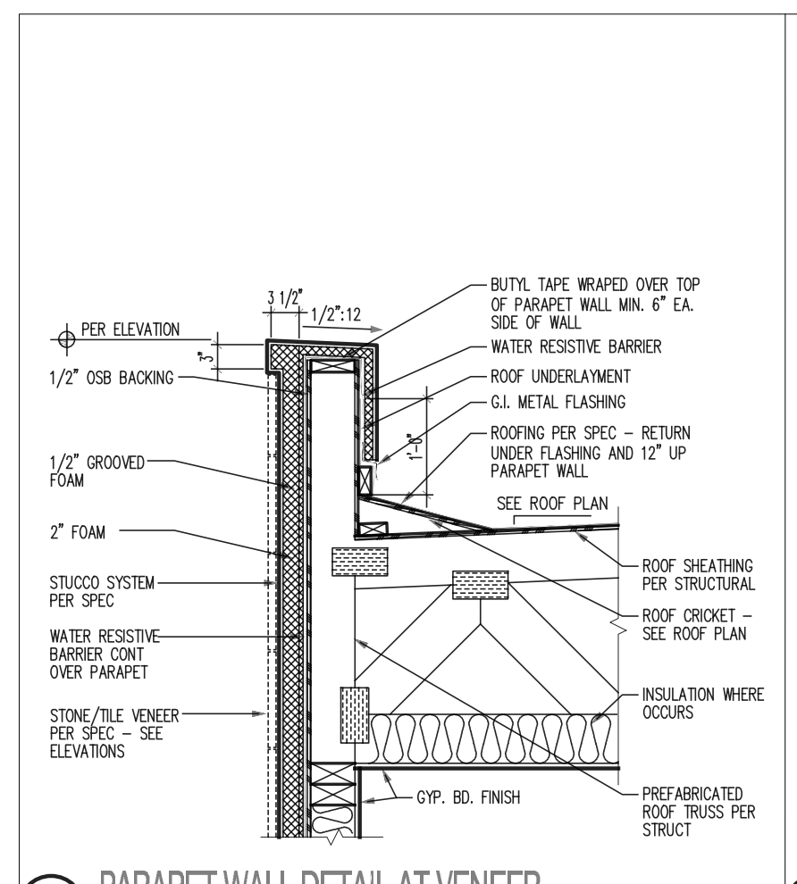
PARAPET WALL DETAIL AT VENEER

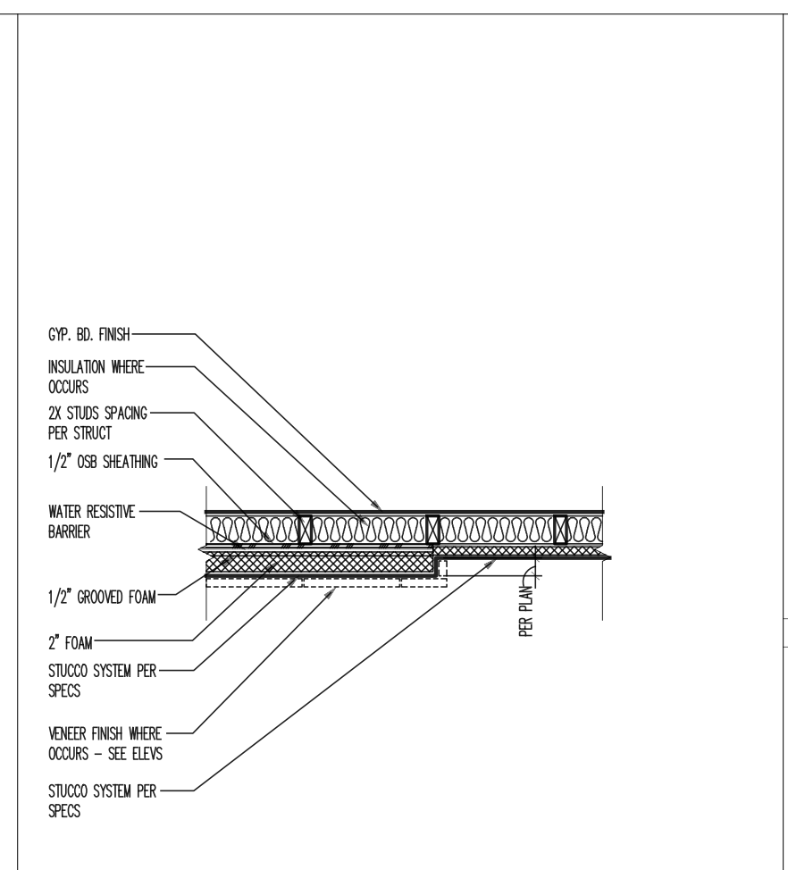
VENEER WALL TO STUCCO WALL TRANSITION

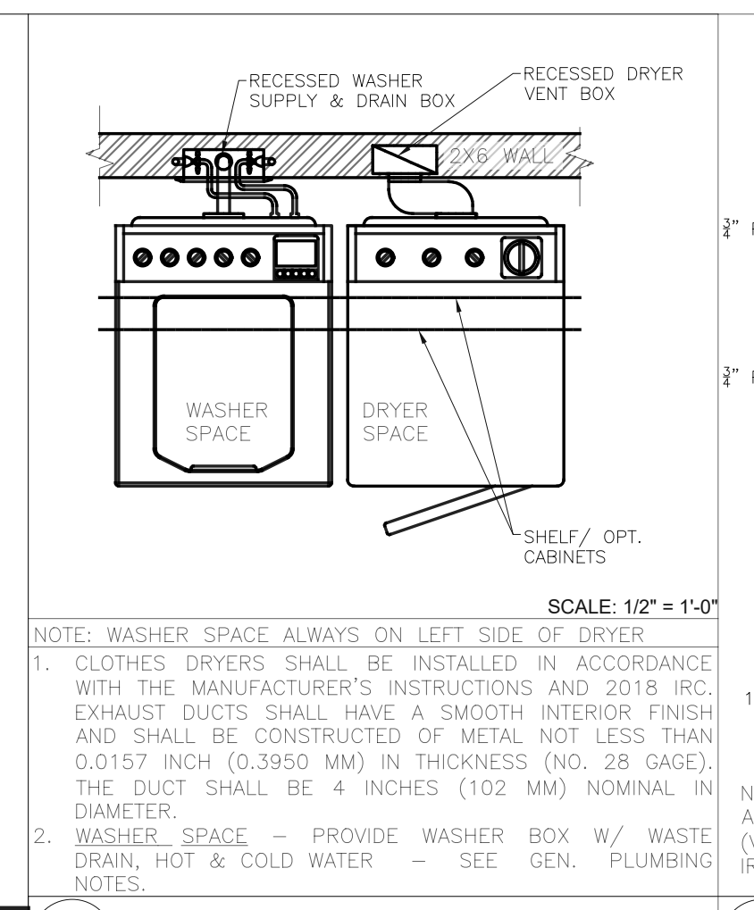
TYPICAL WASHER/DRYER

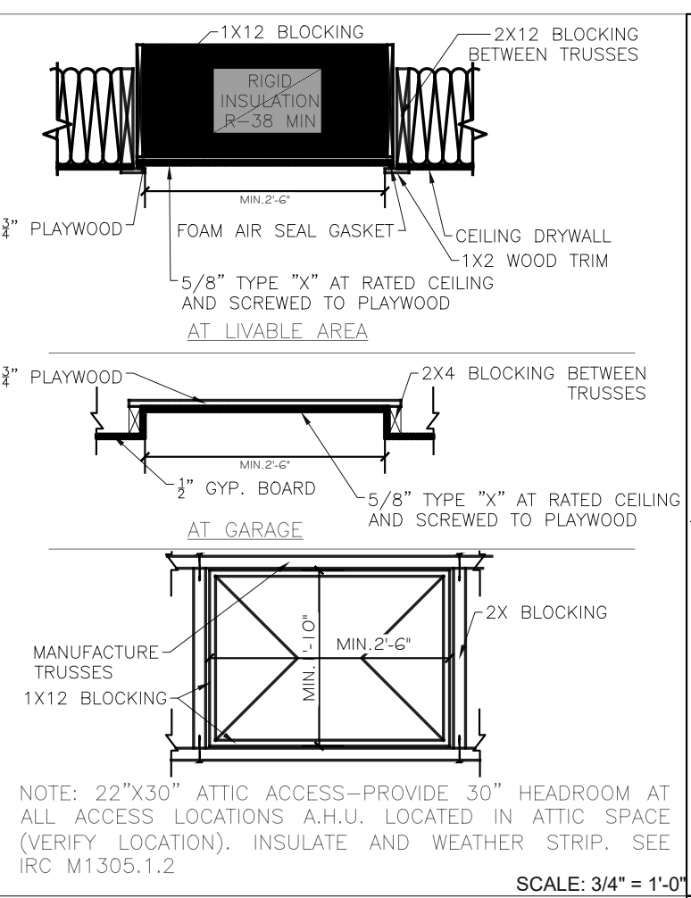
ATTIC ACCESS PANEL

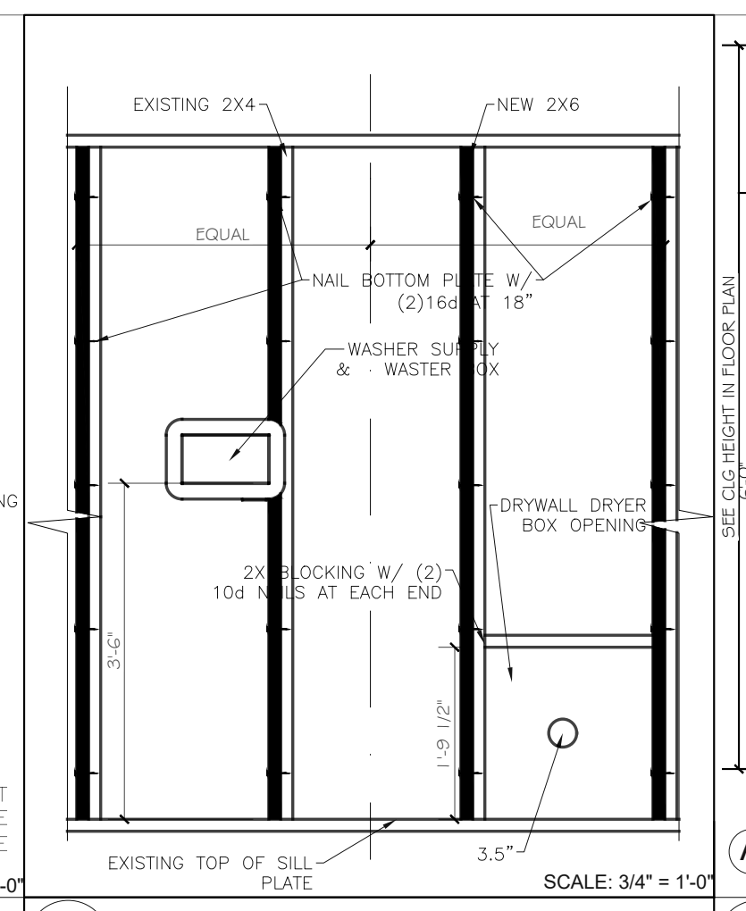
LAUNDRY ROOM SERVICE WALL

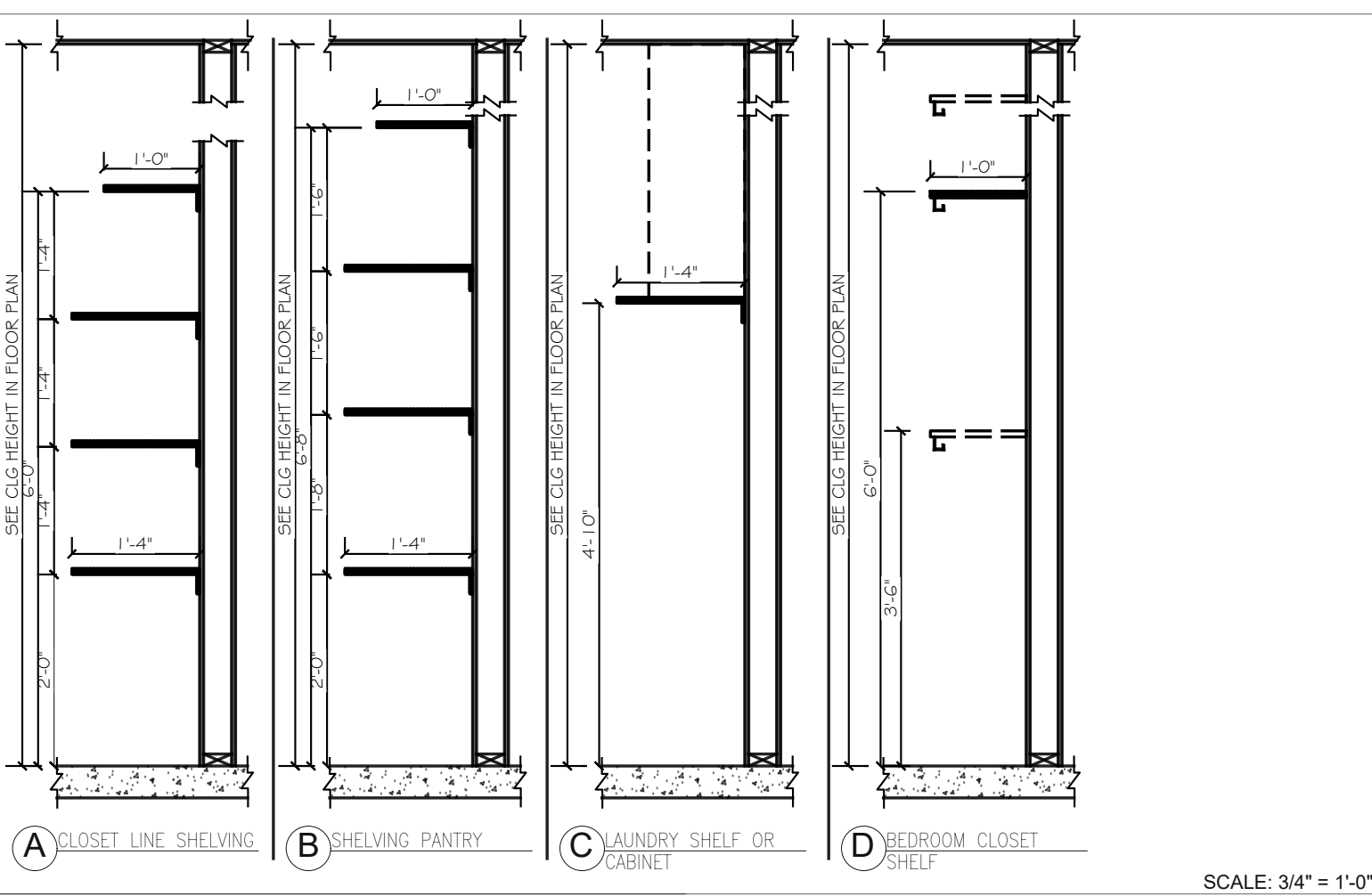
CLOSET, WIC AND PANTRY DETAILS

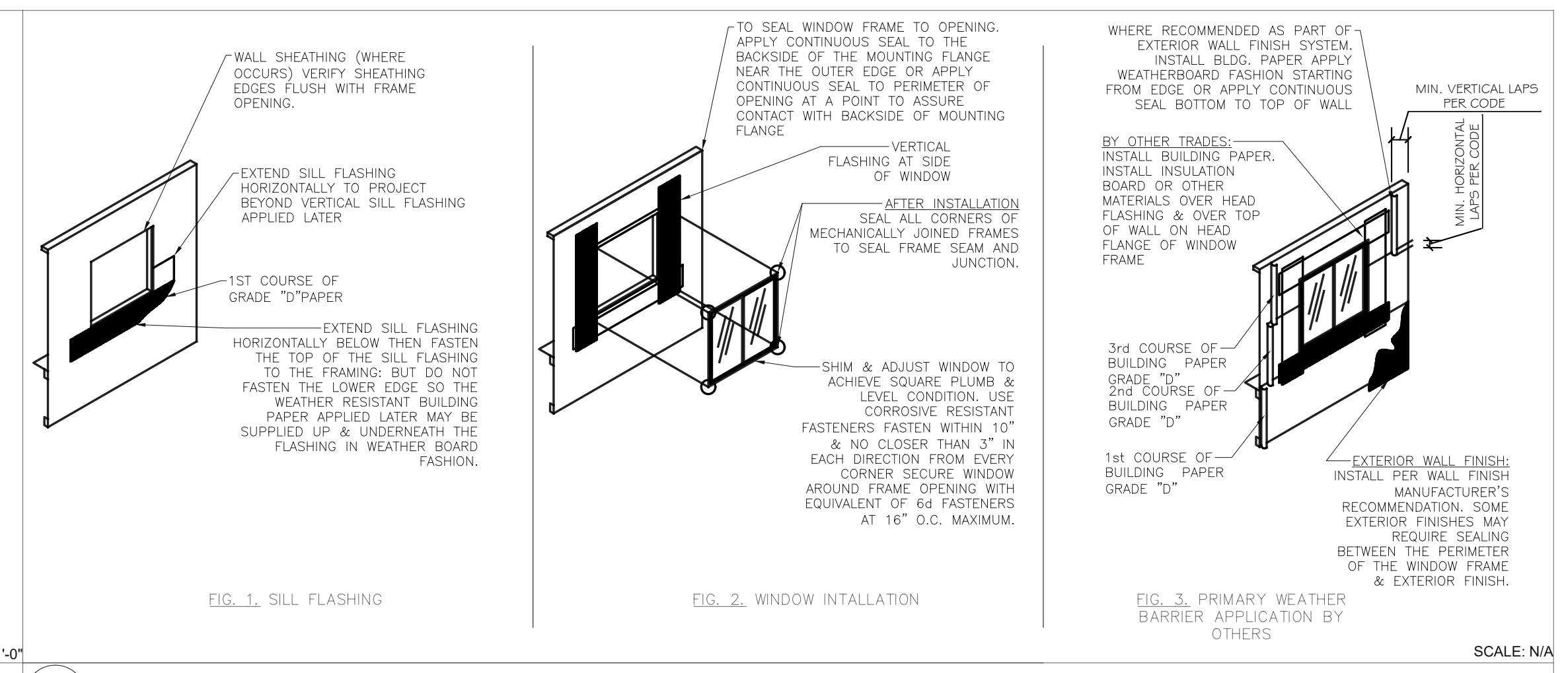
TYPICAL WINDOW FLASHING

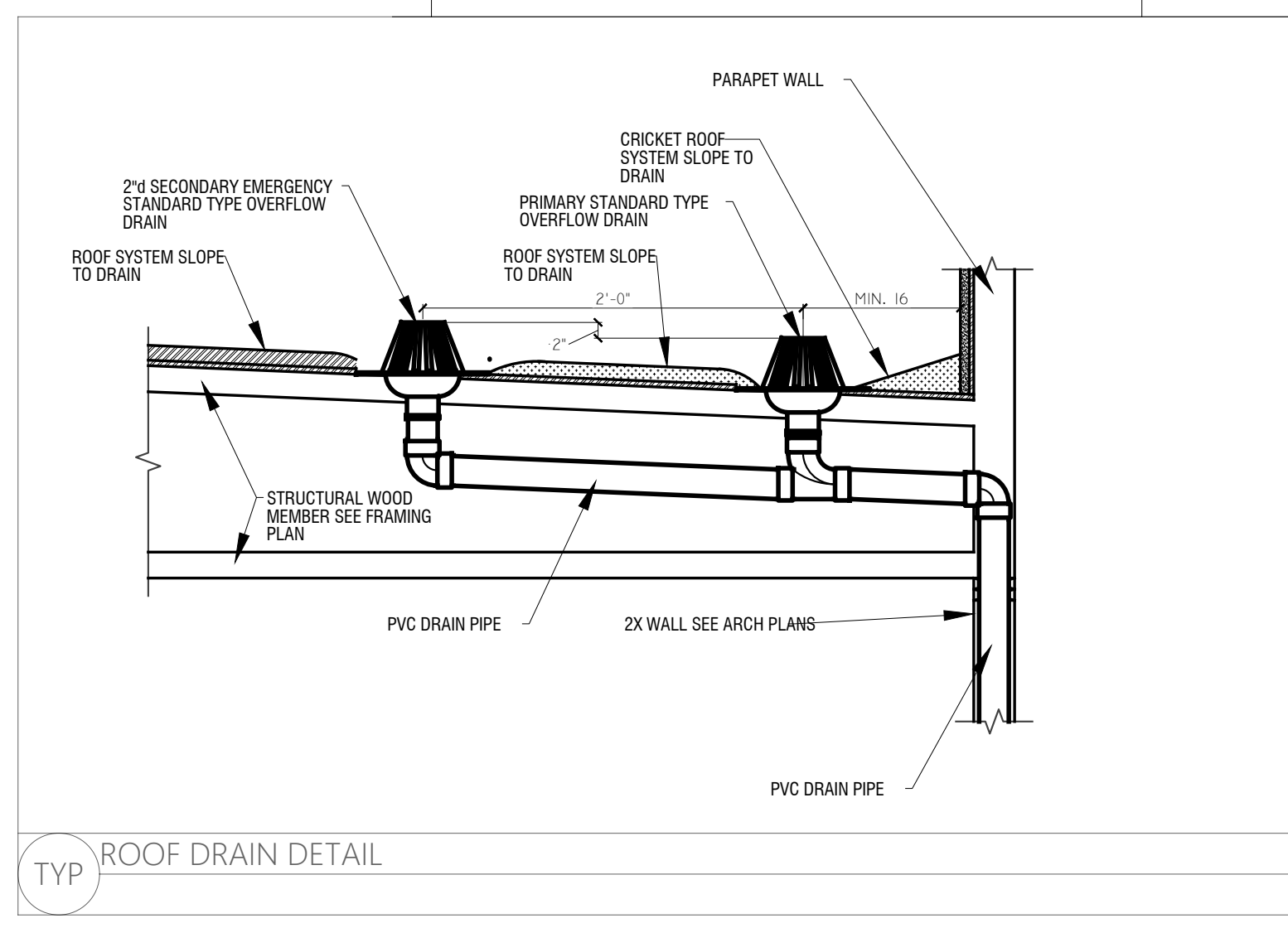
ROOF DRAIN DETAIL

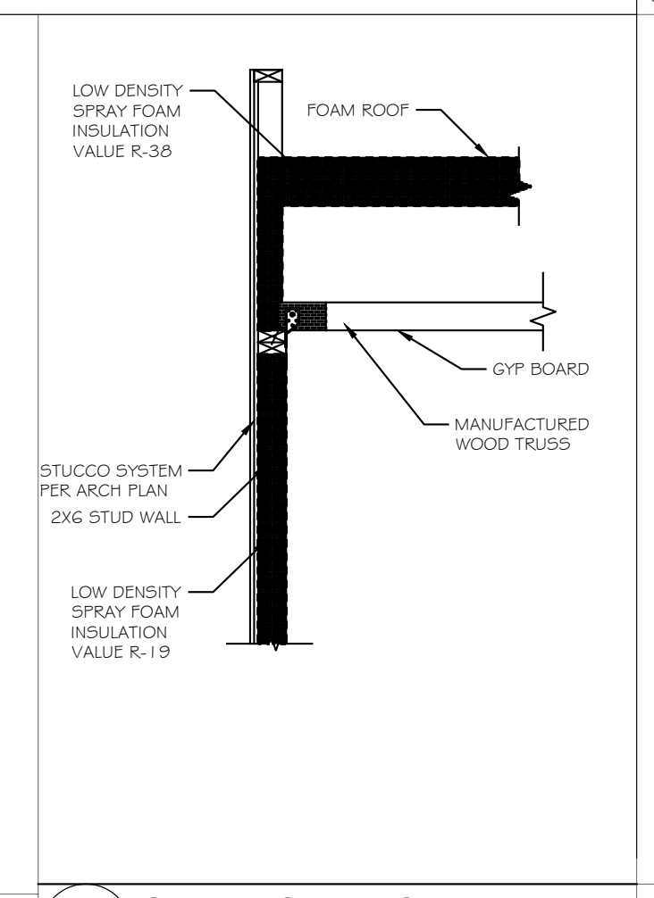
SPRY INSULATION DETAIL

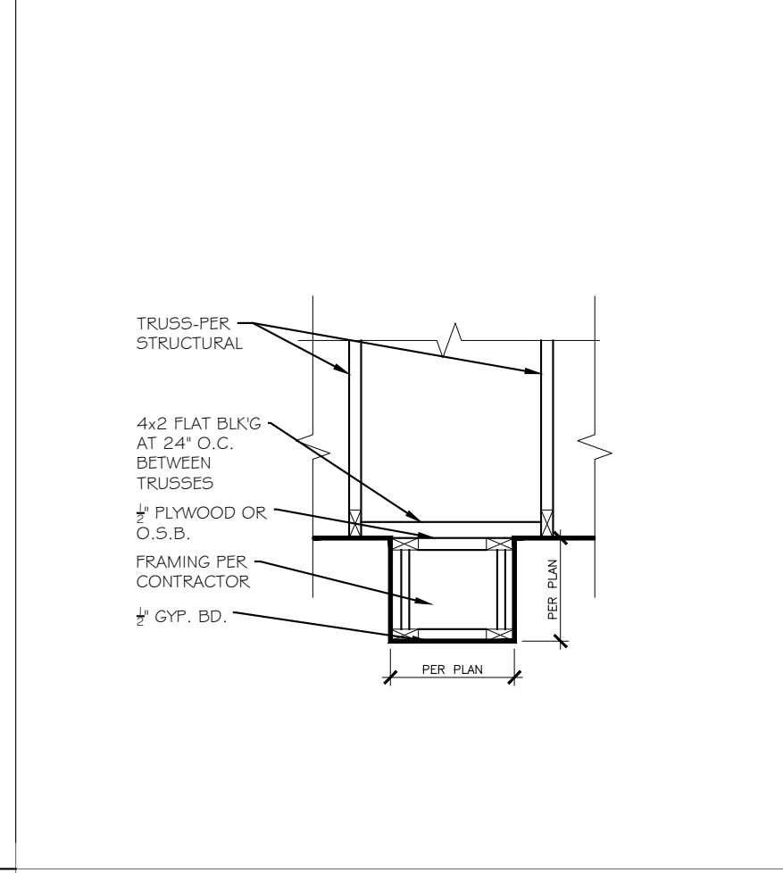
INTERIOR SOFFIT

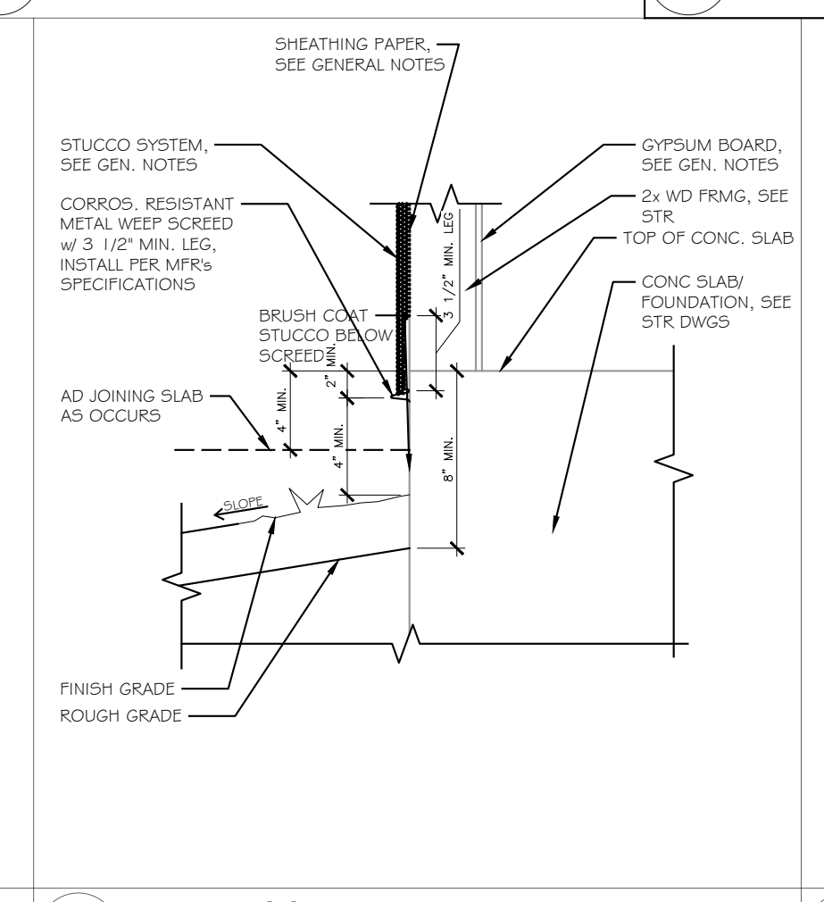
WEEP SCREED

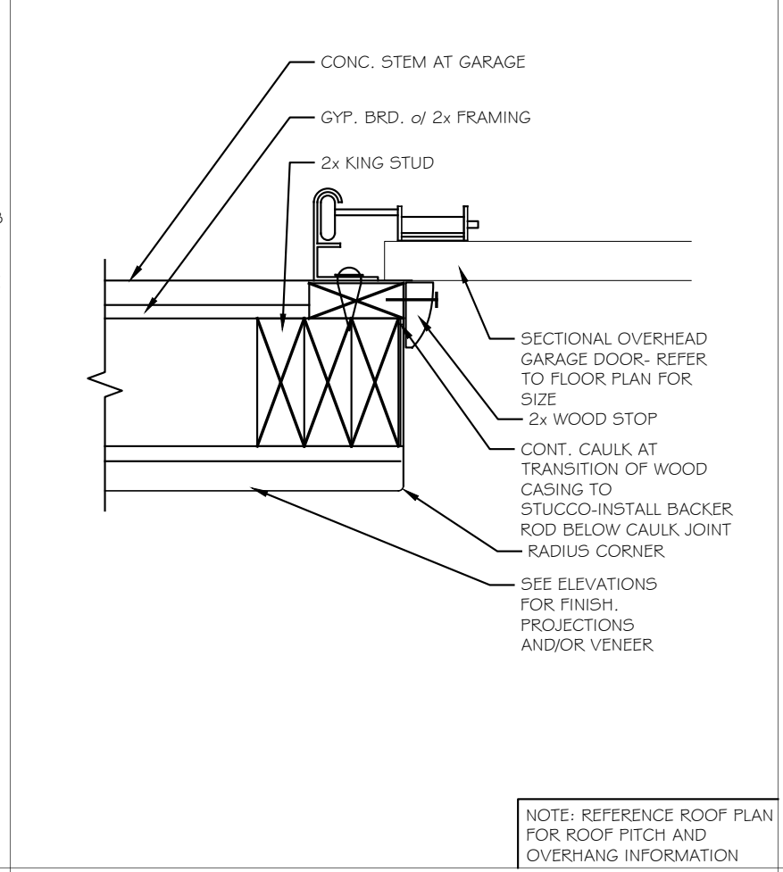
EXTERIOR GARAGE DOOR JAMB

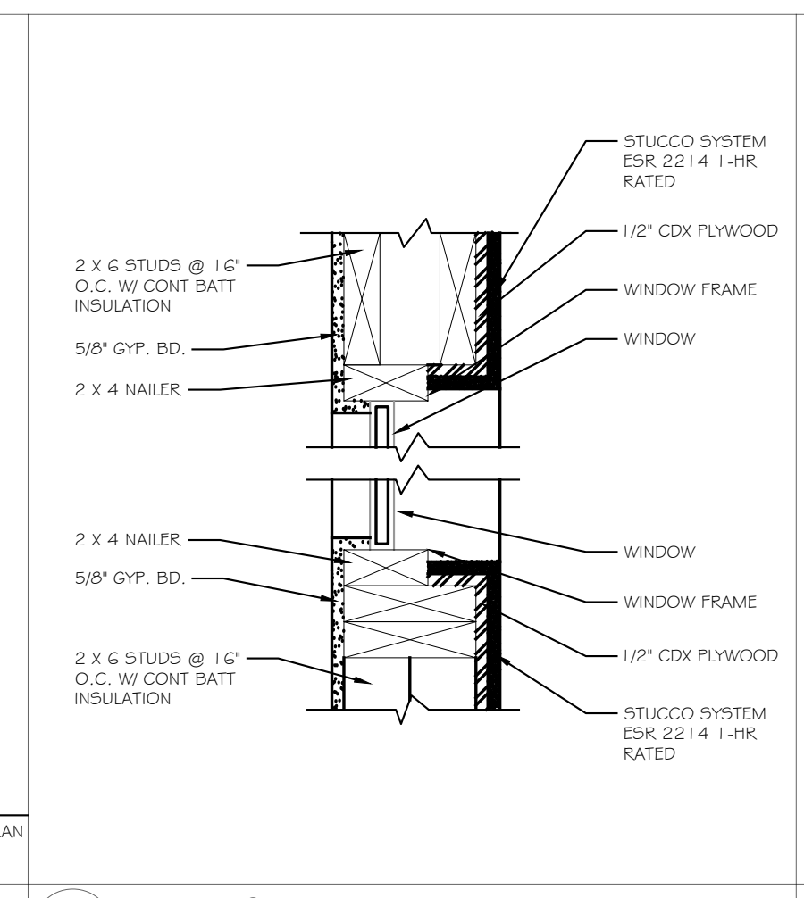
WINDOW JAMB REVEAL

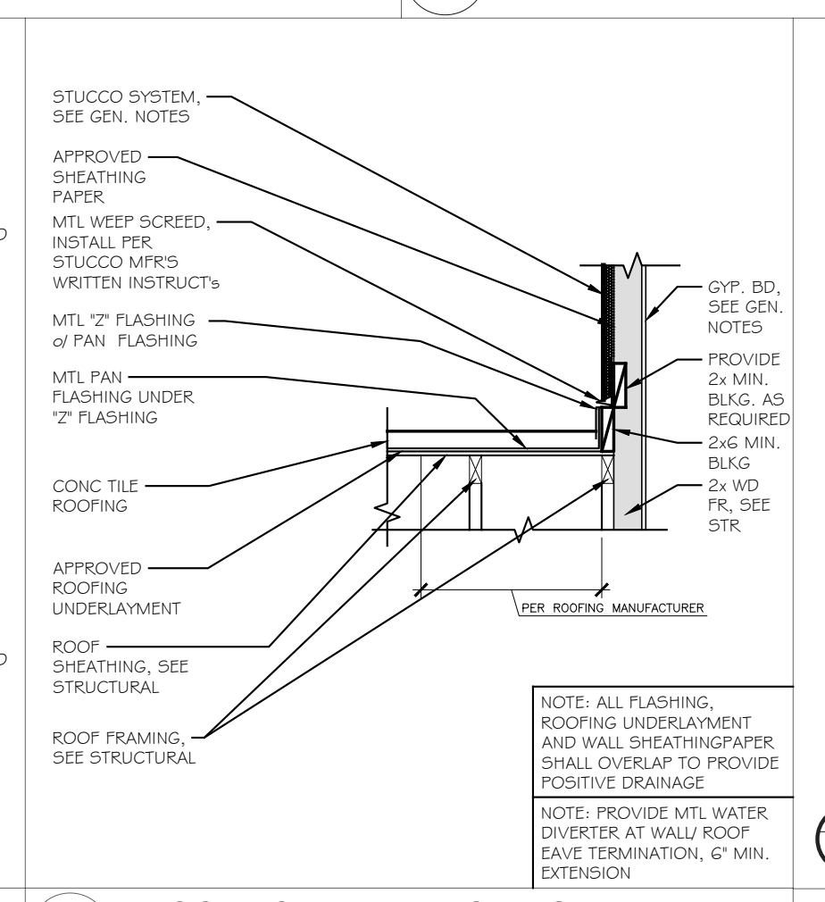
ROOF TO WALL FLASHING

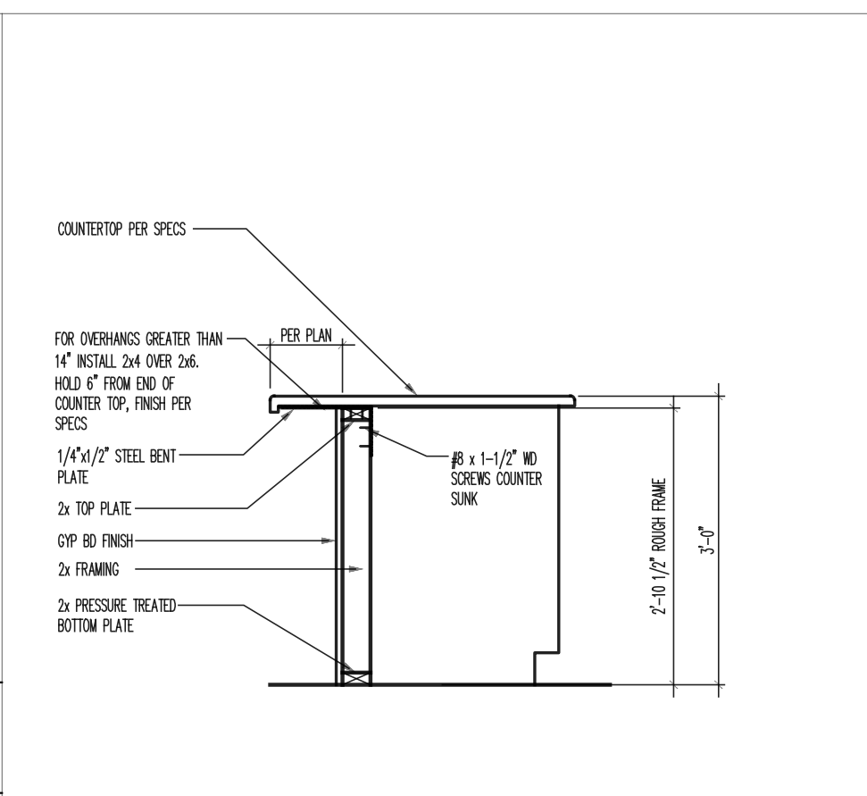
COUNTER OVERHANG

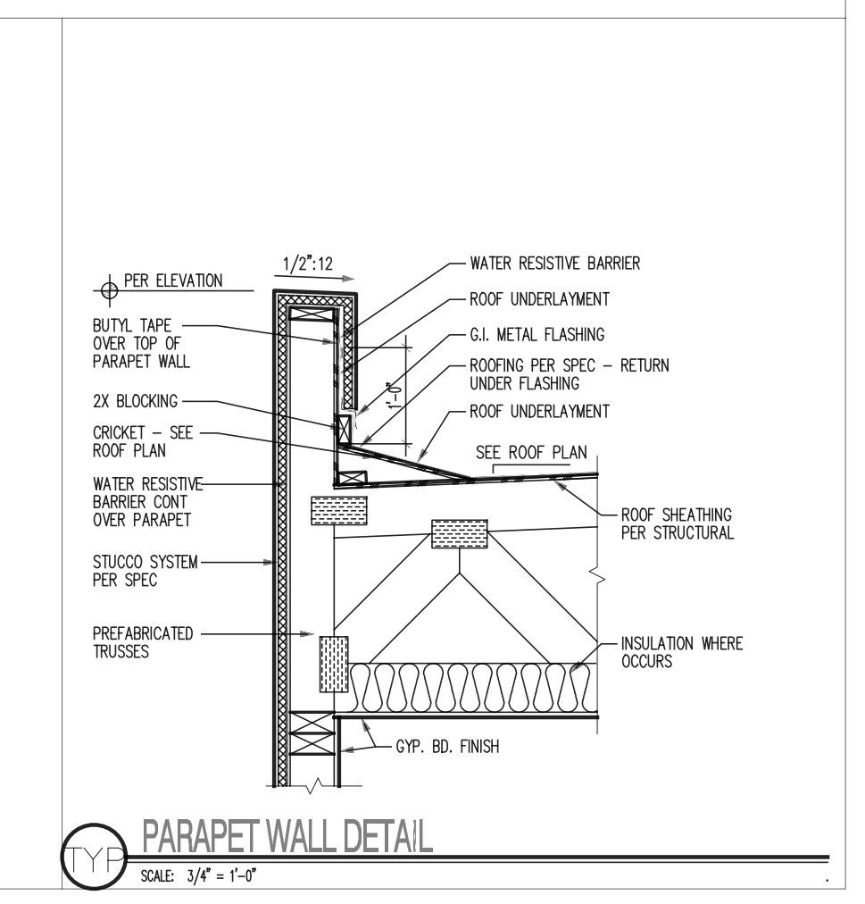
PARAPET WALL DETAIL

ProCa DESIGN LLC

THE INFORMATION CONTAINED ON THESE DRAWINGS SUCH AS DATA, DESIGNS, AND CONCEPTS, ARE PROPERTY OF PROCADESIGN LLC. AND SHALL NOT BE USED FOR ANY OTHER PURPOSE OTHER THAN ORIGINALLY INTENDED WITHOUT WRITTEN PERMISSION OF THE DESIGNER/CONSULTANT.

#	REVISIONS	DATE
1	CITY COMMENTS	12/12/2022
2	CITY COMMENTS	4/5/2023

DANCO RESIDENCE
4441 N JOKAKE DR SCOTTSDALE AZ 85251
172-29-017

DRAWN BY:
ProCa Design
CONTACT #
www.procadesign.net
(602) 606-2885
angelica@procadesign.com
DATE:
OCT. 2020
SCALE:
PER PLAN
SHEET:
GAN

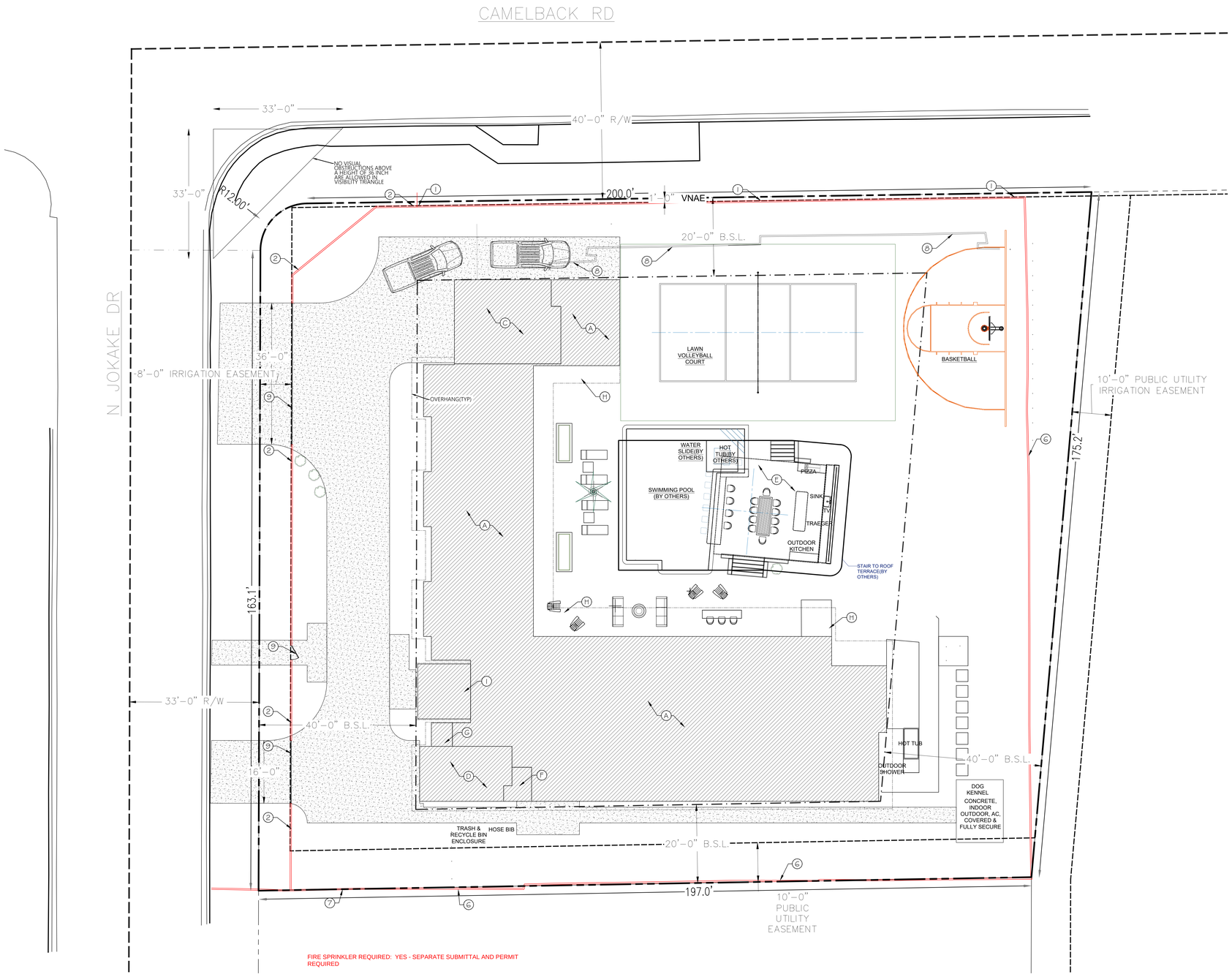

FIRE SPRINKLER REQUIRED: YES - SEPARATE SUBMITTAL AND PERMIT REQUIRED

The potable water supply to automatic fire sprinklers shall be protected against backflow by a double check backflow prevention assembly, a double check fire protection backflow prevention assembly, a reduced pressure principle etc. P2902.5.4

Where non-potable water systems are installed, the piping conveying the non-potable water shall be identified either by color marking, metal tags or tape in accordance with Sections P2901.2.1 through P2901.2.2.3.

SITE PLAN
SCALE: 1" = 10'-0"
0 10' 20'

APPROVED AS NOTED

CITY OF PHOENIX
Planning and Development Department
BY: Justine Cornelius
05/11/2023
This set of plans has been reviewed for **PHOENIX CONSTRUCTION CODE** requirements prior to issuance of Building Permit and shall be kept at the construction site. Such review shall not prevent the Building Official from requiring correction of errors in the plans where such errors are subsequently found to be in violation of any law or ordinance.

Call at least two full working days before you begin excavation.
ARIZONA 811
Arizona Blue Stake, Inc.
Dial 8-1-1 or 1-800-STAKE-IT (782-5348)
In Maricopa County: (602) 263-1100

NOTE:
IF A POOL IS TO BE ADDED AT A LATER TIME; ALL DOORS AND WINDOWS ACCESSING THE POOL AREA MUST COMPLY WITH IRC AG 105.1 POOL BARRIERS - AMENDED; IRC R308.4 ITEM 9 AND CITY OF PHOENIX POOL BARRIER ORDINANCE.

ALL DOORS AND WINDOWS ACCESSING THE POOL AREA MUST COMPLY WITH IRC AG 105.1 POOL BARRIERS - AMENDED; IRC R308.4 ITEM 9 AND CITY OF PHOENIX POOL BARRIER ORDINANCE. IF USING HOUSE WALL AS A PART OF A BARRIER: (1) ALL DOORS MUST BE SELF-CLOSING AND SELF-LATCHING AND MUST SWING OUTWARD FROM THE POOL AREA; (2) A LOCK LOCATED A MINIMUM OF 54 INCHES ABOVE THE FLOOR; (3) ANIMAL OR DOGGIE DOORS ARE NOT ALLOWED; (4) ALL SLIDING GLASS DOORS SHALL BE SELF-CLOSING AND SELF-LATCHING WITH AN APPROVED AUTOMATIC DOOR CLOSER; (5) WINDOW LATCHES MUST BE AT 54 INCHES MINIMUM ABOVE FLOOR, OR; (6) PROVIDE A SEPARATE FENCE.

NOTE:
AN AUTOMATIC SPRINKLER SYSTEM SHALL BE INSTALLED THROUGHOUT ALL LEVELS OF ALL NEW GROUP R-3 AND U OCCUPANCIES OF MORE THAN 5,000 SQUARE FEET. NFPA 13D FIRE SPRINKLER SYSTEM IS REQUIRED. SEPARATE PERMIT IS REQUIRED FROM PHOENIX FIRE DEPARTMENT FOR FIRE PROTECTION SYSTEM. IFC SECTION 513 (PHOENIX AMENDMENT)

PROJECT DESCRIPTION
NEW SINGLE FAMILY RESIDENCE

OWNER
DANCO HOMES LLC

PROJECT INFORMATION

PROJECT ADDRESS:	4441 N JOKAKE DR SCOTTSDALE AZ 85251
ZONING:	RE-35
JURISDICTION:	PHOENIX
SECTION T.R.:	21 2N 4E
LOT.:	9
PARCEL #:	172-29-017
CONSTRUCTION YEAR:	2022

AREAS

LIVABLE		
(A) RESIDENCE		6417.00 SQ. FT.
	TOTAL LIVABLE	6417.00 SQ. FT.
NON LIVABLE		
(C) NORTH GARAGE		567.00 SQ. FT.
(D) SOUTH GARAGE		329.00 SQ. FT.
(E) ROOF SIDE POOL(BY OTHERS, SHOWN FOR REFERENCE)		528.00 SQ. FT.
(F) MECHANICAL ROOMS		67.00 SQ. FT.
(G) STORAGE		32.00 SQ. FT.
(H) REAR PATIO		659.00 SQ. FT.
(I) FRONT PORCH		189.00 SQ. FT.
	TOTAL NON-LIVABLE	2371.00 SQ. FT.
TOTAL AREAS		
LIVABLE		6417.00 SQ. FT.
NON-LIVABLE		2371.00 SQ. FT.
LIVABLE AND NOT LIVABLE		8788.00 SQ. FT.
LOT SIZE		34500.00 SQ. FT.
LOT COVERAGE		25.47 %
MAX LOT COVERAGE		30.00 %

NOTE: THE CALCULATION OF THE LOT COVERAGE WAS DETERMINED BY TAKING THE TOTAL OF THE LIVABLE AND THE NON-LIVABLE. LOT COVERAGE IS 25%, EXCEPT IF ALL STRUCTURES ARE LESS THAN 20' AND 1 STORY IN HEIGHT THEN A MAXIMUM OF 30% LOT COVERAGE IS ALLOWED

VICINITY MAP

KEY NOTES (NOT ALL USED)

1. NEW 6 FEET HEIGHT CMU FENCE WALL (165 LINEAL FEET)
2. NEW 3 FEET HEIGHT CMU FENCE WALL (147 LINEAL FEET)
3. NEW 6 FEET HEIGHT MANUFACTURED WOOD/METAL GATE (10 LINEAL FEET)
4. NEW 200 AMP ELECTRIC PANEL SIDE "A"
5. NEW 200 AMP ELECTRIC PANEL SIDE "B"
6. EXISTING 6 FEET HEIGHT CMU FENCE WALL TO REMAIN
7. EXISTING 3 FEET HEIGHT CMU FENCE WALL TO REMAIN
8. EXISTING 6 FEET HEIGHT CMU FENCE WALL TO BE REMOVED
9. NEW 3 FEET HEIGHT MANUFACTURED WOOD/METAL GATE (55 LINEAL FEET)

TOTAL FENCE: 377 LINEAL FEET

VICINITY MAP

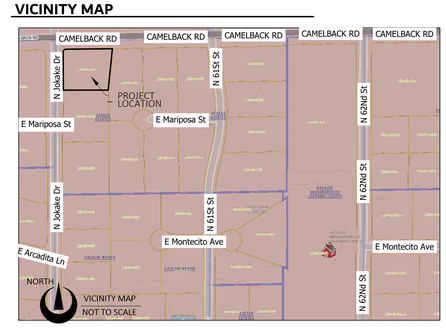

LEGEND

	CONCRETE AREA.	WM	WATER METER
PL	PROPERTY LINE.	S/W	EXISTING SIDEWALK
	SET BACK LINE.	ROW	RIGHT OF WAY
	CENTRAL LINE	PUE	PUBLIC UTILITY EASEMENT
	OVERHANG	BSL	BUILDING SETBACK LINE
WL	WATER LINE	FFE	FINISH FLOOR ELEVATION
SL	SEWER LINE		COP BRASS CAP
G	GAS LINE		PROPERTY CORNER
FO	FIBER CABLE	APN	ASSESSOR PARCEL NUMBER
OHE	OVERHANG ELECTRIC	MCR	MARICOPA COUNTY RECORDS
UGE	UNDERGROUND ELECTRIC	COP	CITY OF PHOENIX
	CHAIN LINK FENCE	BOS	BACK OF SIDEWALK
	BLOCK WALL	BOC	BACK OF CURB
GV	GAS VALVE	LOG	LIP OF GUTTER
S	SANITARY SEWER MANHOLE		
	8" IRRIGATION EASMENT		
	10" P.U.E.		
	VEHICULAR NON ACCESS EASSMENT		
	GROUNDCOVER: DUST PROOFED PALOMINO GOLD 3/4"GRAVEL (2 INCH DEPTH)		

PROCA DESIGN LLC

THE INFORMATION CONTAINED ON THESE DRAWINGS SUCH AS DATA, DESIGNS, AND CONCEPTS, ARE PROPERTY OF PROCADESIGN LLC. AND SHALL NOT BE USED FOR ANY OTHER PURPOSE OTHER THAN ORIGINALLY INTENDED WITHOUT WRITTEN PERMISSION OF THE DESIGNER/CONSULTANT.

#	REVISIONS	DATE
1	CITY COMMENTS	12/12/2022
2	CITY COMMENTS	4/5/2023

DANCO RESIDENCE
4441 N JOKAKE DR SCOTTSDALE AZ 85251
172-29-017

DRAWN BY:
PROCA DESIGN
CONTACT #
www.procadesign.net
(602) 606-2885
angelica@procadesign.com

DATE:
OCT. 2020
SCALE:
PER PLAN
SHEET:
A0

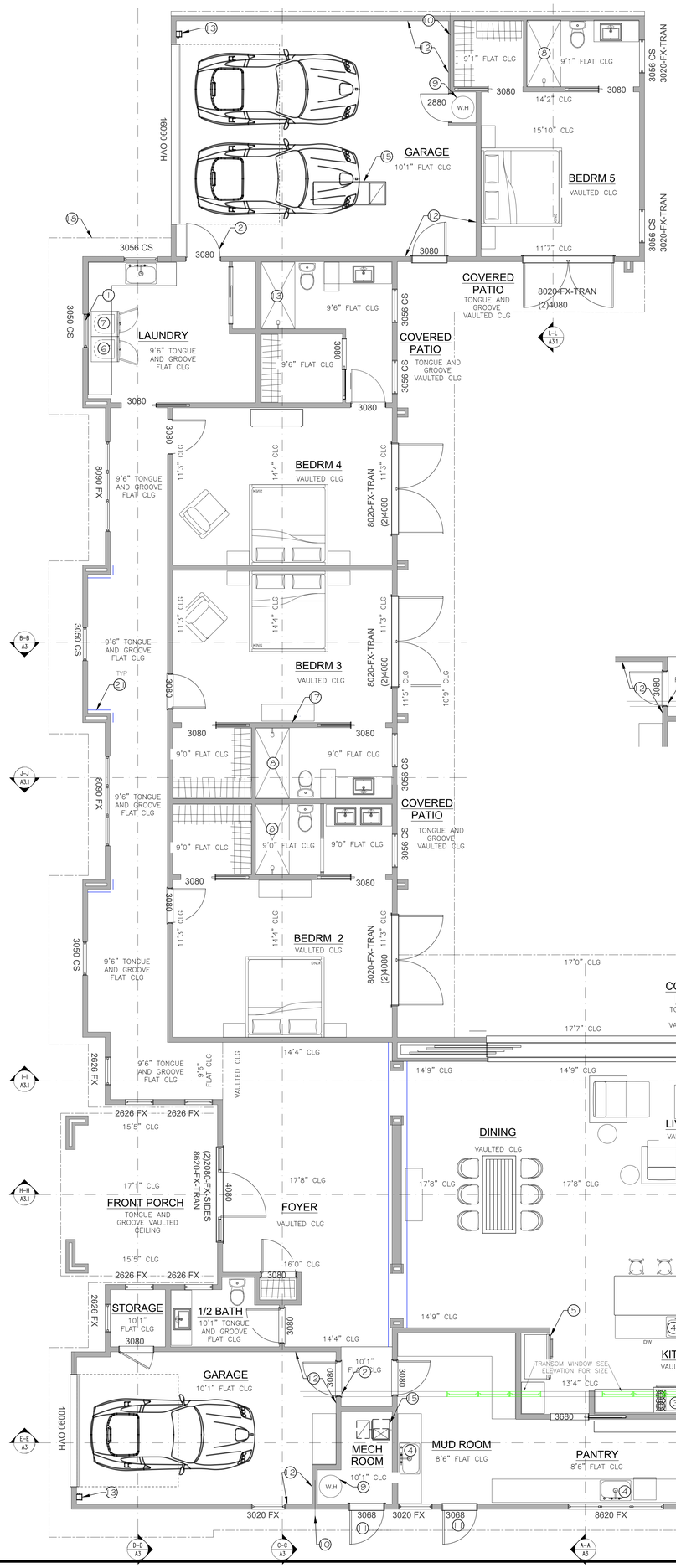

NOTE:
IF A POOL IS TO BE ADDED AT A LATER TIME; ALL DOORS AND WINDOWS ACCESSING THE POOL AREA MUST COMPLY WITH IRC AG 105.1 POOL BARRIERS - AMENDED; IRC R308.4 ITEM 9 AND CITY OF PHOENIX POOL BARRIER ORDINANCE.

ALL DOORS AND WINDOWS ACCESSING THE POOL AREA MUST COMPLY WITH IRC AG 105.1 POOL BARRIERS - AMENDED; IRC R308.4 ITEM 9 AND CITY OF PHOENIX POOL BARRIER ORDINANCE. IF USING HOUSE WALL AS A PART OF A BARRIER: (1) ALL DOORS MUST BE SELF-CLOSING AND SELF-LATCHING AND MUST SWING OUTWARD FROM THE POOL AREA; (2) A LOCK LOCATED A MINIMUM OF 54 INCHES ABOVE THE FLOOR; (3) ANIMAL OR DOGGIE DOORS ARE NOT ALLOWED; (4) ALL SLIDING GLASS DOORS SHALL BE SELF-CLOSING AND SELF-LATCHING WITH AN APPROVED AUTOMATIC DOOR CLOSER; (5) WINDOW LATCHES MUST BE AT 54 INCHES MINIMUM ABOVE FLOOR, OR; (6) PROVIDE A SEPARATE FENCE.

GENERAL NOTES

A. DIMENSION OF FLOOR PLAN ARE SHOWN TO FACE OF STUD TYPICALLY. CONTRACTOR TO VERIFY ROUGH OPENINGS REQUIREMENTS OF ALL DOOR AND WINDOWS UNITS PRIOR TO START OF CONSTRUCTION. CEILINGS AND WALLS SHALL BE ONE LAYER 1/2 INCH GYP BOARD. GARAGE WALLS TO SHALL BE 5/8 INCH GYP BOARD .
B. ALL EXTERIOR AND ENTRY DOORS TO BE SOLID CORE 1 3/4 INCH THICK.
C. ALL INTERIOR DOOR TO BE HOLLOW CORE 1 3/8 INCH THICK (REFER PLAN FOR SIZE)
D. ALL CEILING PER SECTION AND ELEVATION .
E.
F.
G. SHOWER AREA WALL SHALL BE FINISHED WITH APPROVED 'CEMENT'; FIBER-CEMENT'; OR 'GLASS MAT GYPSUM'.
H. COORDINATE CLOSET ROD AND SHELF WITH BUILDER.
I. REFER TO STRUCTURAL PLAN (PAGE S-F-1) FOR MATERIAL SPECIFICATIONS.
J. REFER TO PLUMBING PLAN FOR PLUMBING FIXTURES CALCULATIONS.
K. REFER TO ELECTRICAL PLAN FOR OUTLETS SWITCHES AND LIGHTS LOCATIONS.
L. REFER TO MECHANICAL PLAN FOR ALL DUCT LOCATIONS AND SPECIFICATIONS OF A/C WORK.
M. REFER TO ELEVATIONS AND SECTIONS PLAN FOR SOFFIT HEIGHTS HEADER HEIGHTS AND SLOPES.
N. CENTER-LINE OF WATER CLOSET SHALL BE A MINIMUM OF 15" FROM ANY VERTICAL SURFACE OR FIXTURE.
O. CONCRETE PAD TO SEAT MECHANIC EQUIPMENT
P. FLAT ARCH SOFFIT SPRING POINT @ +85", TOP OF ARCH @ +97".
Q. DRYER VENT V.T.R. TO COMPLY WITH CURRENT CODES.
R. EMERGENCY & RESCUE OPENINGS AT SLEEPING AREAS: NET CLEAR OPENING: 5.7 SQ FT MIN; NET CLEAR OPENING HEIGHT: 24" MIN.; NET CLEAR OPENING WIDTH: 20" MIN.; WINDOW SILL HEIGHT 44" MAX ABOVE THE FLOOR. (BASED ON R310.21-R310.2.2) .
S. WALL AND CEILING FINISHES SHALL HAVE A FLAME SPREAD INDEX OF NOT GREATER THAN 200.
T. WALL AND CEILING FINISHES SHALL HAVE A SMOKE-DEVELOPED INDEX OF NOT GREATER THAN 450.
U. FLAME SPREAD INDEX SHALL NOT EXCEED 25 AND SMOKE DEVELOPED INDEX SHALL NOT EXCEED 450 FOR INSULATION

ENERGY EFFICIENCY

ENVELOPED AREAS SHALL COMPLY WITH THE FOLLOWINGS: FENESTRATION=0.40 MAX U-FACTOR,0.25 MAX SHGC. MIN R-13 AT FRAME WALLS AND FLOORS R-6 @ MASS WALL, R-38 CEILINGS. DUCT INSULATION LOCATED OUTSIDE THE BUILDING ENVELOPE REQUIRES MINIMUM R-8 AND R-6 WHEN LOCATED IN FLOOR JOISTS. MINIMIZE AIR LEAKAGE.

WINDOW AND DOOR INSTALLATION OR REPLACEMENTS NEED TO COMPLY WITH IRC CHAPTER 11. WINDOWS AND DOORS ARE TO HAVE A U-FACTOR OF .40 OR LESS. WINDOWS ARE TO HAVE A SHGC OF .25 OR LESS. MANUFACTURER'S LABELS THAT SHOW THE U-FACTOR AND SHGC VALUES SHALL BE LEFT ON THE DOORS AND WINDOWS UNTIL APPROVED BY THE INSPECTOR

ALL EXTERIOR WALLS AROUND LIVABLE FLOOR SPACE, WALL BETWEEN GARAGE AND LIVABLE FLOOR SPACE SHALL RECEIVE MINIMUM R-13 INSULATION IN 2X4 WALLS AND R-19 IN 2X6 WALLS.

KEYNOTES

1. CLOTHES DRYERS EXHAUST DUCTS SHALL HAVE A SMOOTH INTERIOR FINISH AND SHALL BE CONSTRUCTED OF METAL NOT LESS THAN 0.0157 INCH (0.3950 MM) IN THICKNESS (NO. 28 GAGE). THE DUCT SHALL BE 4 INCHES (102 MM) NOMINAL IN DIAMETER. 35 FEET MAX LENGTH
2. 20 MIN FIRE RATED 1 3/8" THICK S.C. DOOR WITH SELF CLOSING DEVICE, TIGHT FITTING GASKET AND SWEEP. PER R302.2.1.
3. COOK-TOP OR RANGE AND DOUBLE OVEN EXHAUST FAN (SHALL VENT TO EXTERIOR). GAS POWERED COOK-TOP OR RANGE AND DOUBLE OVEN EXHAUST FAN (SHALL VENT TO EXTERIOR)
4. DOUBLE SINK W/ GARBAGE DISPOSAL
5. REFRIGERATOR SPACE - PROVIDE 1/4" C.W. LINE FOR ICE MAKER, SEE GEN. PLUMBING NOTES.
6. WASHER SPACE - PROVIDE WASHER BOX W/ WASTE DRAIN, HOT & COLD WATER - SEE GEN. PLUMBING NOTES.
7. CLOTHES DRYERS SHALL BE INSTALLED IN ACCORDANCE WITH THE MANUFACTURER'S INSTRUCTIONS AND 2018 IRC. GAS CLOTHES DRYER EXHAUST DUCTS SHALL A SMOOTH INTERIOR FINISH AND SHALL BE CONSTRUCTED OF METAL NOT LESS THAN 0.0157 INCH THICKNESS (NO. 28 GAGE). THE DUCT SHALL BE 4 INCHES NOMINAL IN DIAMETER
8. SHOWER W/ TEMP. GLASS ENCLOSURE AND TILE SURROUNDS, TO A HEIGHT OF 6 FEET ABOVE THE FLOOR. TEMPERED (IRC R307.2).
9. PROVIDE NON-COMBUSTIBLE PLATFORM 32" SQ. x 18" ABOVE FINISH FLOOR FOR WATER HEATER. GAS WATER HEATER-USE NON RIGID CONNECTIONS. INSTALL P&T RELIEF VALVE PIPED TO OUTSIDE OD DWELLING.
10. T&P RELIEF LINE TO BE FULL SIZE STEEL PIPE OR HARD DRAWN COPPER TUBING EXTENDING TO THE EXTERIOR OF THE BUILDING AND TERMINATING IN A DOWNWARD POSITION NOT MORE THAN 6" ABOVE GRADE.
11. PROVIDE A MINIMUM CONCRETE LANDING IN EACH OUTER DOOR (BY CODE I.C.C. E.S.R. R311.4.3). THE WIDTH OF EACH LANDING WILL NOT BE LESS THAN THE DOOR SERVED. THE LANDINGS SHOULD HAVE A DIMENSION OF NOT LESS THAN 36 INCHES (914 MM) MEASURED IN THE TRAVEL ADDRESS. THE ROPE OUTSIDE THE LANDINGS WILL NOT EXCEED / VERTICAL UNIT IN 12 HORIZONTAL UNITS (2 PERCENT), BY CODE ICR R311.3).
12. 5/8" FIRE-RATED-GYP. BOARD ON GARAGE WALLS AND CEILING
13. WALL MOUNTED GARAGE DOOR OPENER WITH GASKETS ALL AROUND AND GARAGE DOOR OPENER.
14. PREFABRICATED GAS FIREPLACE INSTALL PER MANUFACTURE.
15. MECHANICAL UNITS, SEE MECHANICAL PLANS FOR INFORMATION
16. 5'-0" TALL WALL W/ TEMP. GLASS ABOVE
17. FULL-HEIGHT WALL
18. OVERHANG LINE
19. OUTDOOR SHOWER
20. OUTDOOR HOT TUB
21. INTERIOR STONE VENNER

EXPANDED TRANSOM WINDOWS AREA

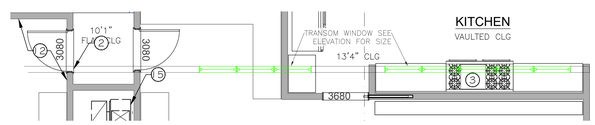

NOTE:
AN AUTOMATIC SPRINKLER SYSTEM SHALL BE INSTALLED THROUGHOUT ALL LEVELS OF ALL NEW GROUP R-3 AND U OCCUPANCIES OF MORE THAN 5,000 SQUARE FEET. NFPA 13D FIRE SPRINKLER SYSTEM IS REQUIRED. SEPARATE PERMIT IS REQUIRED FROM PHOENIX FIRE DEPARTMENT FOR FIRE PROTECTION SYSTEM. IFC SECTION 513 (PHOENIX AMENDMENT)

MAIN FLOOR PLAN
SCALE: 1/4" = 1'-0"

NORTH

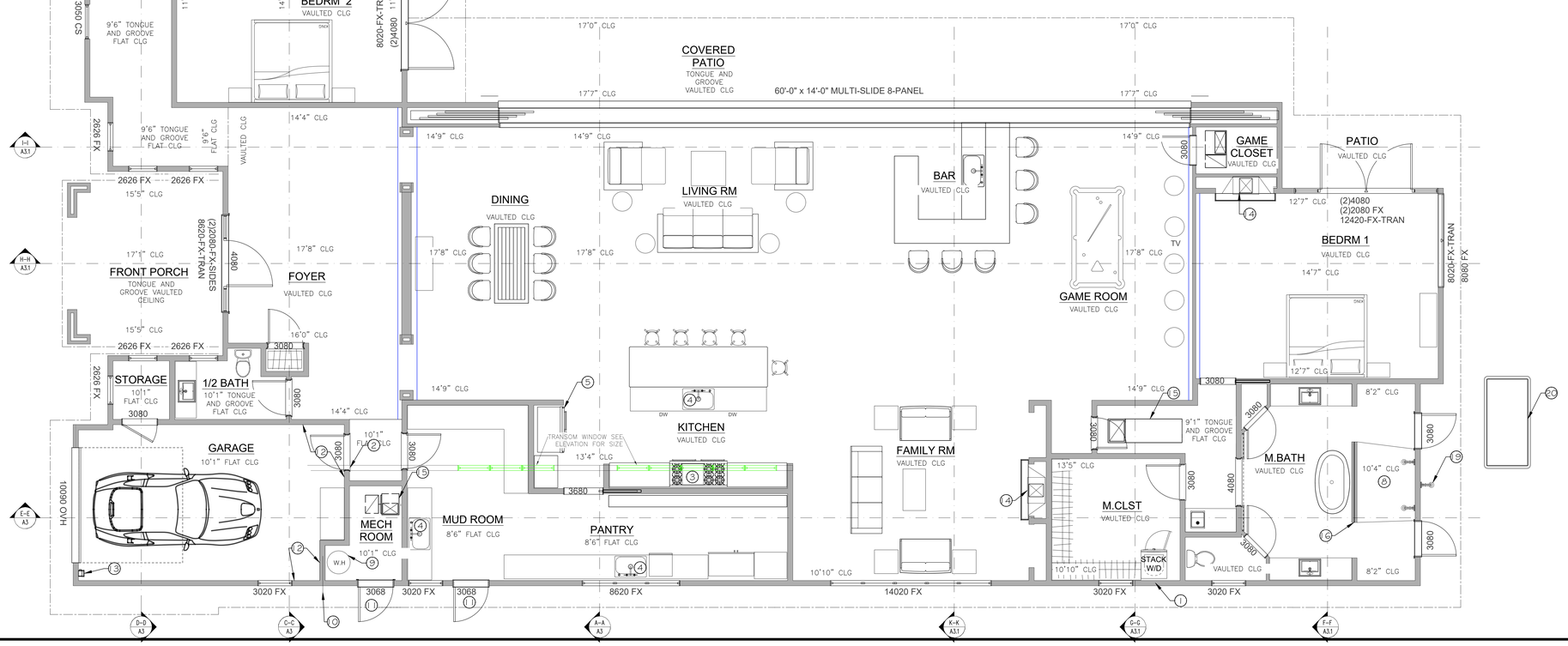

CITY OF PHOENIX
Planning and Development Department
By: Justine Cornelius
05/11/2023
This set of plans has been reviewed for PHOENIX CONSTRUCTION CODE requirements prior to issuance of Building Permit and shall be kept at the construction site. Such review shall not prevent the Building Official from requiring correction of errors in the plans where such errors are subsequently found to be in violation of any law or ordinance.

THE INFORMATION CONTAINED ON THESE DRAWINGS SUCH AS DATA, DESIGNS, AND CONCEPTS, ARE PROPERTY OF PROCADESIGN LLC. AND SHALL NOT BE USED FOR ANY OTHER PURPOSE OTHER THAN ORIGINALLY INTENDED WITHOUT WRITTEN PERMISSION OF THE DESIGNER/CONSULTANT.

#	REVISIONS	DATE
1	CITY COMMENTS	12/12/2022
2	CITY COMMENTS	4/5/2023

DANCO RESIDENCE
4441 N JOKAKE DR SCOTTSDALE AZ 85251
172-29-017

DRAWN BY:
PROCA DESIGN
CONTACT #
www.procadesign.net
(602) 606-2885
angelica@procadesign.com

DATE:
OCT. 2020

SCALE:
PER PLAN

SHEET:
A1

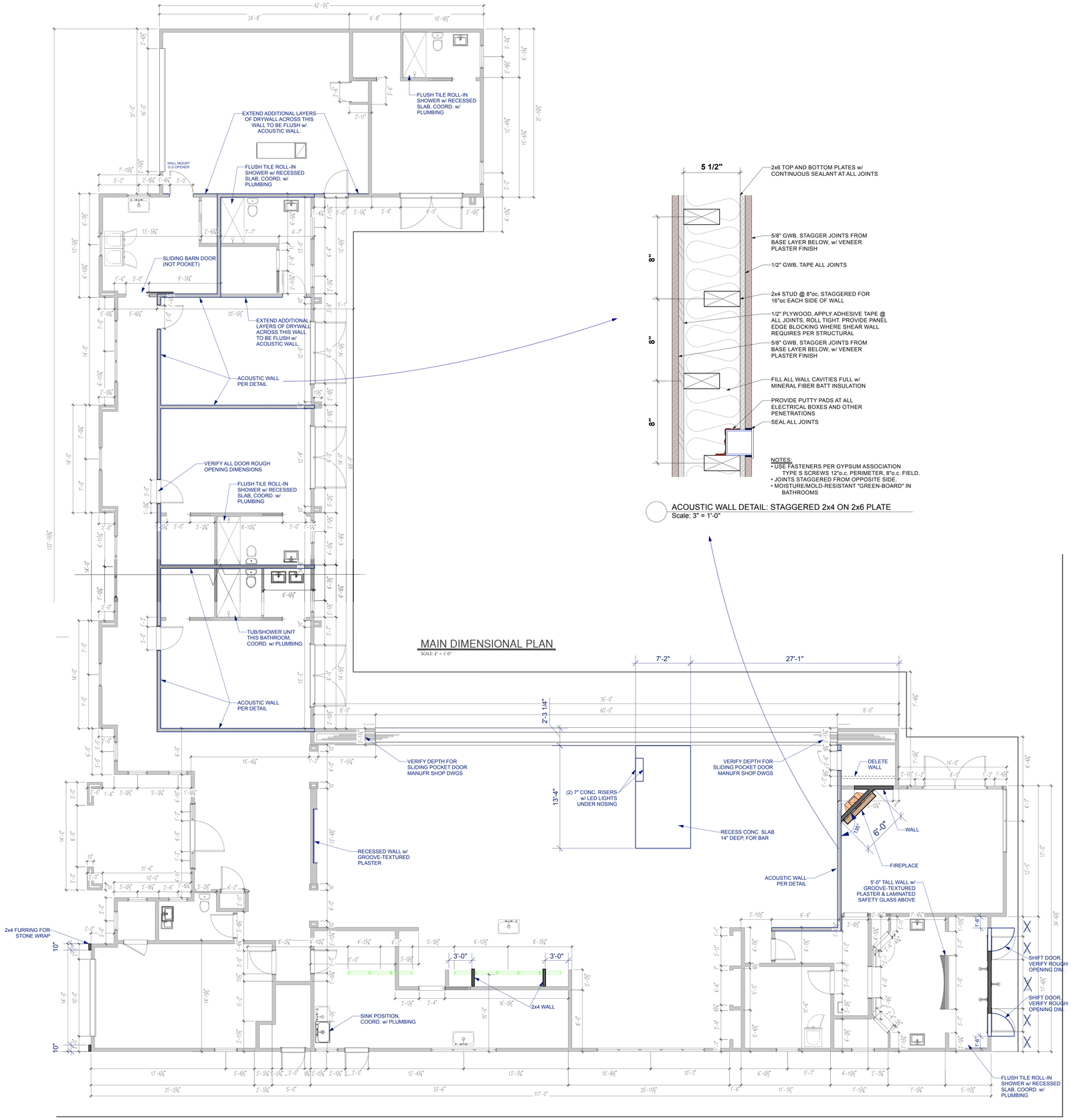

ACOUSTIC WALL DETAIL: STAGGERED 2x4 ON 2x6 PLATE
Scale: 3" = 1'-0"

1 FLOOR PLAN MARK-UP
Scale: 3/16" = 1'-0"

MARK-UP
2023-07-22

FRONT ELEVATION
SCALE: 1/4" = 1'-0"

REAR ELEVATION
SCALE: 1/4" = 1'-0"

LEGEND

SYSTEM ROOF

SHINGLE ROOF SYSTEM: ESR 1389

STUCCO SYSTEM: 2323

SAND STUCCO FINSH

STONE VENEER: ESR 3970

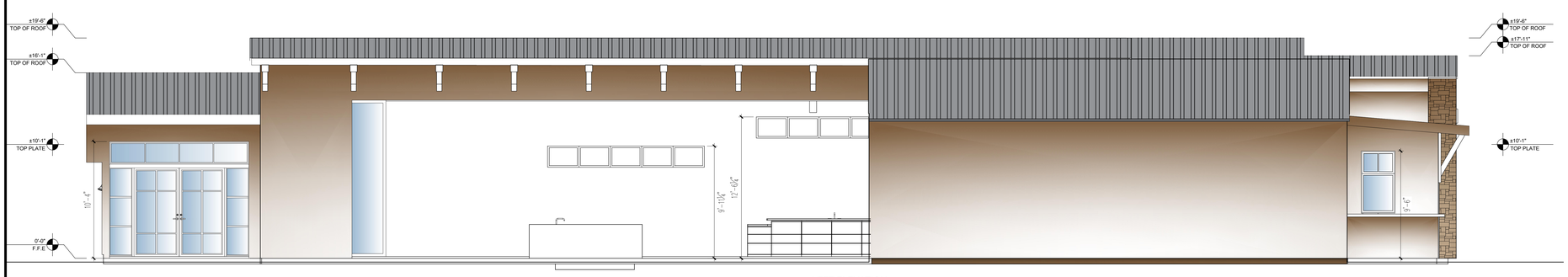

LEFT ELEVATION
SCALE: 1/4" = 1'-0"

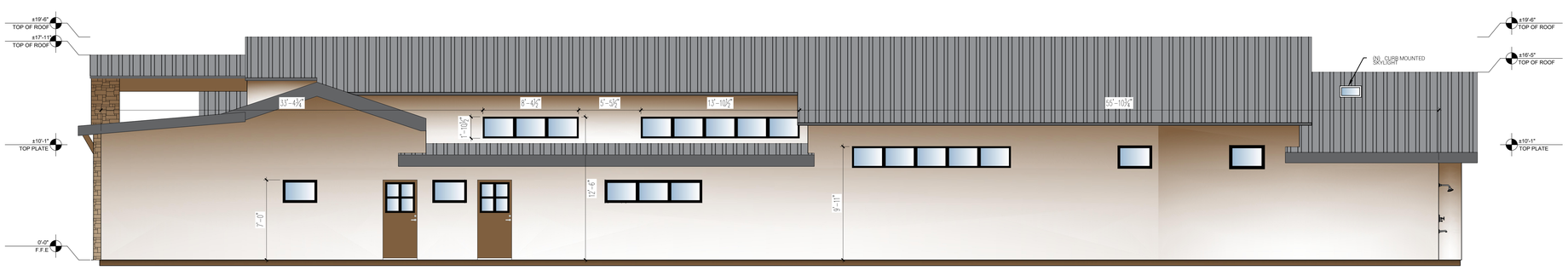

RIGHT ELEVATION
SCALE: 1/4" = 1'-0"

FINISHES NOTE

A. PROVIDE (2) LAYER 30# FELT FLASHING AT ALL HEADS, JAMBS, AND SILLS OF WINDOWS AND DOOR OPENINGS. REFER TO TYPICAL DETAIL OF WINDOW FLASHING
B. PROVIDE CONTINUOUS SEALANT BEAD WHERE STUCCO ABUTS WINDOWS AND DOORS FRAME SO AS TO PROVIDE A WEATHER RESISTIVE BARRIER.REFER TO TYPICAL DETAIL OF WINDOW FLASHING.
C. PROVIDE CONT. 26 GA. G.I. WEEP SCREED, WITH 3-1/2" VERTICAL NAILING FLANGE AT +4" ABOVE FINISH GRADE.
D. MECHANICAL EQUIPMENT TO BE SCREENED BY WALL +1'-0" ABOVE HIGHEST MECHANICAL EQUIPMENT.
E. WINDOW AND DOOR INSTALLATION OR REPLACEMENTS NEED TO COMPLY WITH IRC CHAPTER 11. WINDOWS AND DOORS ARE TO HAVE A U-FACTOR OF .40 OR LESS. WINDOWS ARE TO HAVE A SHGC OF .25 OR LESS. MANUFACTURER'S LABELS THAT SHOW THE U-FACTOR AND SHGC VALUES SHALL BE LEFT ON THE DOORS AND WINDOWS UNTIL APPROVED BY THE INSPECTOR

STUCCO SYSTEM

A. ONE(1) COAT STUCCO SYSTEM (ESR-2323) OVER 1" GA SELF-FURRED WOVEN WIRE FABRIC OVER 1" SUBSTRATE (AS LISTED BELOW) OVER 1-GRADE "D" BUILDING PAPER(U.N.O) SUBSTRATE:
   A.A. FROM TOP OF SLAB TO ROOF PLATE LINE 1" EXPANDED POLYSTYRENE
   A.B. ABOVE TOP PLATE: 1" INSULATIONS FOAM BOARD,EXCEPTIONS:AT OPTIONAL CATHEDRAL INSULATION,1" EXPANDED POLYSTYRENE SHALL BE USED AT ALL CONDITIONED AREAS BELOW AND ABOVE TOP PLATE.
B. MAG ONE-COAT STUCCO COMPLIANCE PROGRAM. ALL ONE-COAT STUCCO SYSTEMS SHALL BE APPLIED BY MANUFACTURERS APPROVED INSTALLERS. AN APPROVED WEATHER-RESISTIVE BARRIER SHALL BE INSTALLED OVER ALL FRAMING AND WOOD BASED SHEATHING.

STUCCO NOTE

A. TYPICAL EXTERIOR WALL -WOOD STUDS WITH GYP. WALLBOARD AT INTERIOR FACE AND ONE(1) STUCCO SYSTEM OVER 1" GA SELF-FURRED WOVEN WIRE FABRIC OVER 1" SUBSTRATE (AS LISTED BELOW) OVER 1-GRADE "D" BUILDING PAPER(U.N.O) SUBSTRATE:
   A.A. FROM TOP OF SLAB TO ROOF PLATE LINE 1" EXPANDED POLYSTYRENE
   A.B. ABOVE TOP PLATE:1" INSULATION FOAM BOARD. EXCEPTIONS:AT OPTIONAL CATHEDRAL INSULATION,1" EXPANDED POLYSTYRENE SHALL BE USED AT ALL CONDITIONED AREAS BELOW AND ABOVE TOP PLATE.
B. TYPICAL INTERIOR WALL - 1/2" GYP. WALLBOARD EACH SIDE OF 2x6 WOOD STUDS AT 16" O.C. - PROVIDE SOUND INSULATION AS INDICATED ON PLAN.
C. MINIMUM INSULATION VALUES - WALLS = R-19, AND ROOF = R-38.
D. AREAS OUTSIDE THE THERMAL ENVELOP ARE REQUIRED TO MEET AIR LEAKAGE REQUIREMENTS PER N1102.4
E. PROVIDE REQUIRED AND THE PROVIDED NET FREE VENTILATING AREA. DETAIL AND NOTE ON THE PLANS THE LOCATION OF ROOF VENTILATION. IF A CONDITIONED ATTIC ASSEMBLY IS PROPOSED,SHOW COMPLIANCE WITH IRC806.5 GE.

CITY OF PHOENIX
Planning and Development Department
BY: Justine Cornelius
05/11/2023
This set of plans has been reviewed for **PHOENIX CONSTRUCTION CODE** requirements prior to issuance of Building Permit and shall be kept at the construction site. Such review shall not prevent the Building Official from requiring correction of errors in the plans where such errors are subsequently found to be in violation of any law or ordinance.

NOTE:
IF A POOL IS TO BE ADDED AT A LATER TIME; ALL DOORS AND WINDOWS ACCESSING THE POOL AREA MUST COMPLY WITH IRC AG 105.1 POOL BARRIERS - AMENDED; IRC R308.4 ITEM 9 AND CITY OF PHOENIX POOL BARRIER ORDINANCE.

ALL DOORS AND WINDOWS ACCESSING THE POOL AREA MUST COMPLY WITH IRC AG 105.1 POOL BARRIERS - AMENDED; IRC R308.4 ITEM 9 AND CITY OF PHOENIX POOL BARRIER ORDINANCE. IF USING HOUSE WALL AS A PART OF A BARRIER: (1) ALL DOORS MUST BE SELF-CLOSING AND SELF-LATCHING AND MUST SWING OUTWARD FROM THE POOL AREA; (2) A LOCK LOCATED A MINIMUM OF 54 INCHES ABOVE THE FLOOR; (3) ANIMAL OR DOGGIE DOORS ARE NOT ALLOWED; (4) ALL SLIDING GLASS DOORS SHALL BE SELF-CLOSING AND SELF-LATCHING WITH AN APPROVED AUTOMATIC DOOR CLOSER; (5) WINDOW LATCHES MUST BE AT 54 INCHES MINIMUM ABOVE FLOOR, OR; (6) PROVIDE A SEPARATE FENCE.

PROCA DESIGN LLC

THE INFORMATION CONTAINED ON THESE DRAWINGS SUCH AS DATA, DESIGNS, AND CONCEPTS, ARE PROPERTY OF PROCADESIGN LLC. AND SHALL NOT BE USED FOR ANY OTHER PURPOSE OTHER THAN ORIGINALLY INTENDED WITHOUT WRITTEN PERMISSION OF THE DESIGNER/CONSULTANT.

#	REVISIONS	DATE
1	CITY COMMENTS	12/12/2022
2	CITY COMMENTS	4/5/2023

DANCO RESIDENCE
4441 N JOKAKE DR SCOTTSDALE AZ 85251
172-29-017

DRAWN BY:
PROCA DESIGN
CONTACT #
www.procadesign.net
(602) 606-2885
angelica@procadesign.com
DATE:
OCT. 2020
SCALE:
PER PLAN
SHEET:
A2

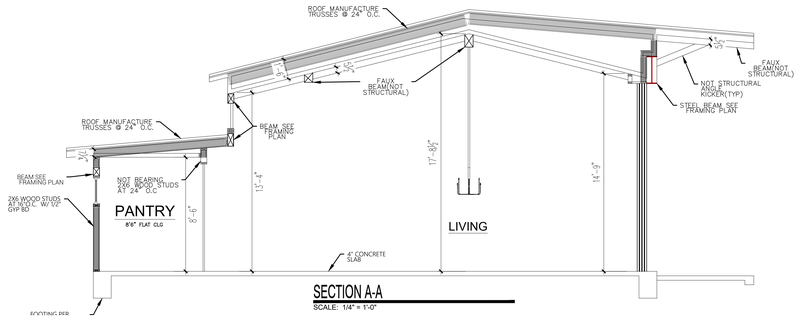

SECTION A-A

SCALE: 1/4" = 1'-0"

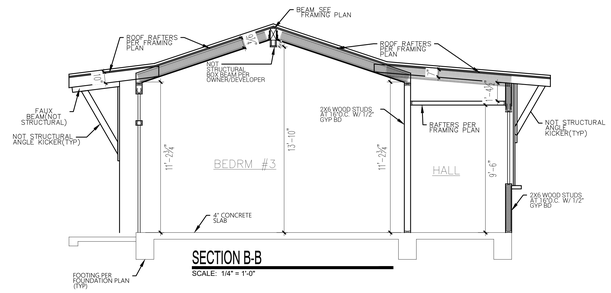

SECTION B-B

SCALE: 1/4" = 1'-0"

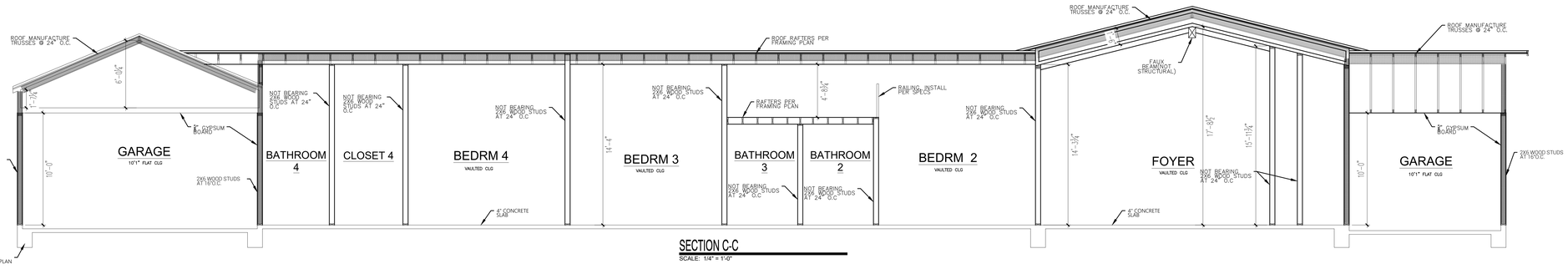

SECTION C-C

SCALE: 1/4" = 1'-0"

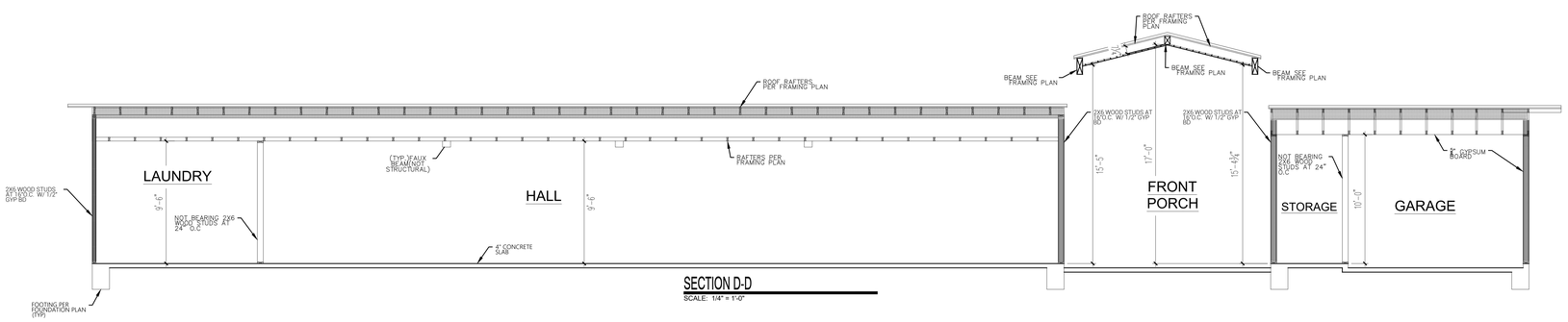

SECTION D-D

SCALE: 1/4" = 1'-0"

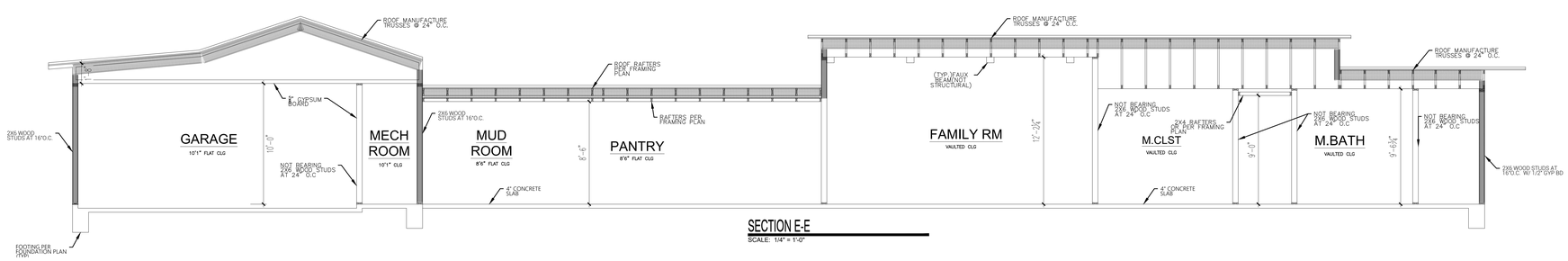

SECTION E-E

SCALE: 1/4" = 1'-0"

INSULATON

SPRAY FOAM INSULATION : ESR-2298

ENERGY EFFICIENCY

A. INSULATION LEVEL ARE SPECIFIED BY R-VALUE. R-VALUE IS A MEASURE OF INSULATION'S ABILITY TO RESIST HEAT TRAVELING THROUGH IT. THE HIGHER THE R-VALUE THE BETTER THE THERMAL PERFORMANCE OF THE INSULATION. ENVELOPED AREAS (LIVABLE SPACE) WILL MEET THE LEVELS OF INSULATION.

B. DUCT INSULATION LOCATED OUTSIDE THE BUILDING ENVELOPE REQUIRES MINIMUM R-8 MINIMIZE AIR LEAKAGE.

C. WINDOW AND DOOR INSTALLATION OR REPLACEMENTS NEED TO COMPLY WITH IRC CHAPTER 11. WINDOWS AND DOORS ARE TO HAVE A U-FACTOR OF .40 OR LESS. WINDOWS ARE TO HAVE A SHGC OF .25 OR LESS. MANUFACTURER'S LABELS THAT SHOW THE U-FACTOR AND SHGC VALUES SHALL BE LEFT ON THE DOORS AND WINDOWS UNTIL APPROVED BY THE INSPECTOR.

ELEMENT	MINIMUM R-VALUE
2X WOOD STUD	R-13
CEILING WITH ATTIC SPACE	R-38
2X WALL BETWEEN GARAGE & LIVABLE	R-13
FLOOR OVER UNHEATED SPACES	R-6
FLOOR JOISTS	6
MASONRY WALL	R-11

GYPSUM BOARD NOTE

A. FOR APPLICATION WITHOUT ADHESIVE, A PAIR OF NAILS SPACED NOT LESS THAN 2 INCHES APART OR MORE THAN 2-1/2 INCHES APART MAY BE USED WITH THE PAIR OF NAILS SPACED 12 INCHES ON CENTER.

B. SCREWS SHALL BE IN ACCORDANCE WITH SECTION R702.3.6. SCREWS USED TO ATTACH GYPSUM BOARD TO STRUCTURAL INSULATED PANELS SHALL PENETRATE THE WOOD STRUCTURAL PANEL FACING NOT LESS THAN 7/16 INCH.

C. THREE-EIGHTHS-INCH-THICK SINGLE-PLY GYPSUM BOARD SHALL NOT BE USED ON A CEILING WHERE A WATER-BASED TEXTURED FINISH IS TO BE APPLIED, OR WHERE IT WILL BE REQUIRED TO SUPPORT INSULATION ABOVE A CEILING. ON CEILING APPLICATIONS TO RECEIVE A WATER-BASED TEXTURE MATERIAL, EITHER HAND OR SPRAY APPLIED, THE GYPSUM BOARD SHALL BE APPLIED PERPENDICULAR TO FRAMING.

D. WHEN APPLYING A WATER-BASED TEXTURE MATERIAL, THE MINIMUM GYPSUM BOARD THICKNESS SHALL BE INCREASED FROM 3/8 INCH TO 1/2 INCH FOR 16-INCH ON CENTER FRAMING, AND FROM 1/2 INCH TO 5/8 INCH FOR 24-INCH ON CENTER FRAMING OR 1/2-INCH SAG-RESISTANT GYPSUM CEILING BOARD SHALL BE USED.

E. TYPE X GYPSUM BOARD FOR GARAGE CEILINGS BENEATH HABITABLE ROOMS SHALL BE INSTALLED PERPENDICULAR TO THE CEILING FRAMING AND SHALL BE FASTENED AT MAXIMUM 6 INCHES O.C. BY MINIMUM 17/8 INCHES 6D COATED NAILS OR EQUIVALENT DRYWALL SCREWS.GE.

NOTE

A. FOR APPLICATION WITHOUT ADHESIVE, A PAIR OF NAILS SPACED NOT LESS THAN 2 INCHES APART OR MORE THAN 2-½ INCHES APART MAY BE USED WITH THE PAIR OF NAILS SPACED 12 INCHES ON CENTER.

B. SCREWS SHALL BE IN ACCORDANCE WITH SECTION R702.3.6. SCREWS USED TO ATTACH GYPSUM BOARD TO STRUCTURAL INSULATED PANELS SHALL PENETRATE THE WOOD STRUCTURAL PANEL FACING NOT LESS THAN 7/16 INCH.

C. WHERE COLD-FORMED STEEL FRAMING IS USED WITH A CLINCHING DESIGN TO RECEIVE NAILS BY TWO EDGES OF METAL, THE NAILS SHALL BE NO LESS THAN 3/4 INCH LONGER THAN THE GYPSUM BOARD THICKNESS AND SHALL HAVE RINGED SHANKS. WHERE THE COLD-FORMED STEEL FRAMING HAS A NAILING GROOVE FORMED TO RECEIVE THE NAILS, THE NAILS SHALL HAVE BARBED SHANKS OR BE 5D, 1/2 GAGE, 15/8 INCHES LONG, 15/64-INCH HEAD FOR 1/2-INCH GYPSUM BOARD; AND 6D, 13 GAGE, 17/8 INCHES LONG, 15/64-INCH HEAD FOR 5/8-INCH GYPSUM BOARD.

D. THREE-EIGHTHS-INCH-THICK SINGLE-PLY GYPSUM BOARD SHALL NOT BE USED ON A CEILING WHERE A WATER-BASED TEXTURED FINISH IS TO BE APPLIED, OR WHERE IT WILL BE REQUIRED TO SUPPORT INSULATION ABOVE A CEILING. ON CEILING APPLICATIONS TO RECEIVE A WATER-BASED TEXTURE MATERIAL, EITHER HAND OR SPRAY APPLIED, THE GYPSUM BOARD SHALL BE APPLIED PERPENDICULAR TO FRAMING. WHEN APPLYING A WATER-BASED TEXTURE MATERIAL, THE MINIMUM GYPSUM BOARD THICKNESS SHALL BE INCREASED FROM 3/8 INCH TO 1/2 INCH FOR 16-INCH ON CENTER FRAMING, AND FROM 1/2 INCH TO 5/8 INCH FOR 24-INCH ON CENTER FRAMING OR 1/2-INCH SAG-RESISTANT GYPSUM CEILING BOARD SHALL BE USED.

E. TYPE X GYPSUM BOARD FOR GARAGE CEILINGS BENEATH HABITABLE ROOMS SHALL BE INSTALLED PERPENDICULAR TO THE CEILING FRAMING AND SHALL BE FASTENED AT MAXIMUM 6 INCHES O.C. BY MINIMUM 1 3/4 INCHES 6D COATED NAILS OR EQUIVALENT DRYWALL SCREWS.

CITY OF PHOENIX
Planning and Development Department
BY: Justine Cornelius

05/11/2023

This set of plans has been reviewed for **PHOENIX CONSTRUCTION CODE** requirements prior to issuance of Building Permit and shall be kept at the construction site. Such review shall not prevent the Building Official from requiring correction of errors in the plans where such errors are subsequently found to be in violation of any law or ordinance.

THE INFORMATION CONTAINED ON THESE DRAWINGS SUCH AS DATA, DESIGNS, AND CONCEPTS, ARE PROPERTY OF PROCADESIGN LLC. AND SHALL NOT BE USED FOR ANY OTHER PURPOSE OTHER THAN ORIGINALLY INTENDED WITHOUT WRITTEN PERMISSION OF THE DESIGNER/CONSULTANT.

#	REVISIONS	DATE
1	CITY COMMENTS	12/12/2022
2	CITY COMMENTS	4/5/2023

DANCO RESIDENCE

4441 N JOKAKE DR SCOTTSDALE AZ 85251

172-29-017

DRAWN BY:
ProCa Design
CONTACT #
www.procadesign.net
(602) 606-2885
angelica@procadesign.com

DATE:
OCT. 2020

SCALE:
PER PLAN

SHEET:

A3

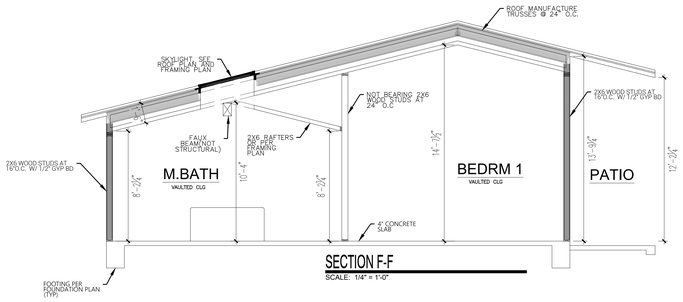

SECTION F-F
SCALE: 1/4" = 1'-0"

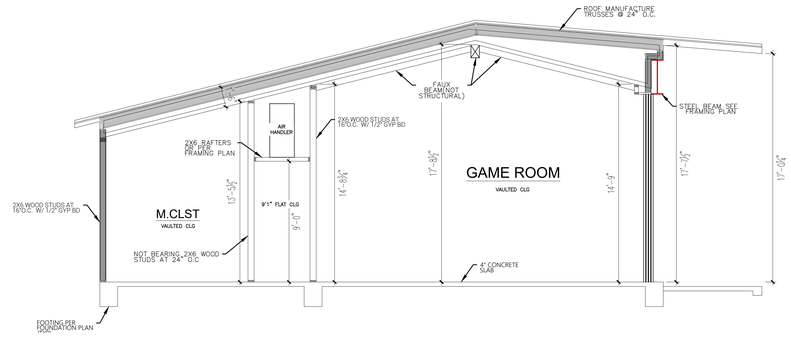

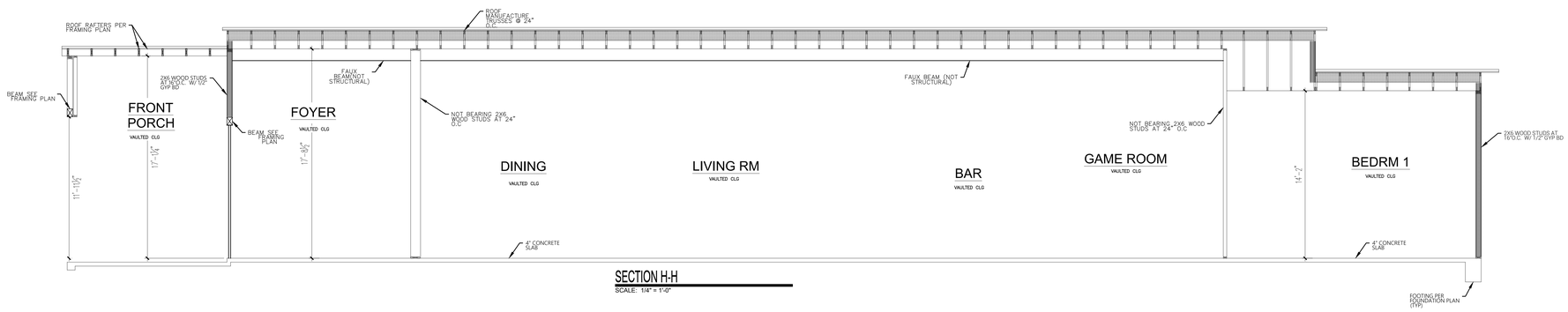

SECTION H-H
SCALE: 1/4" = 1'-0"

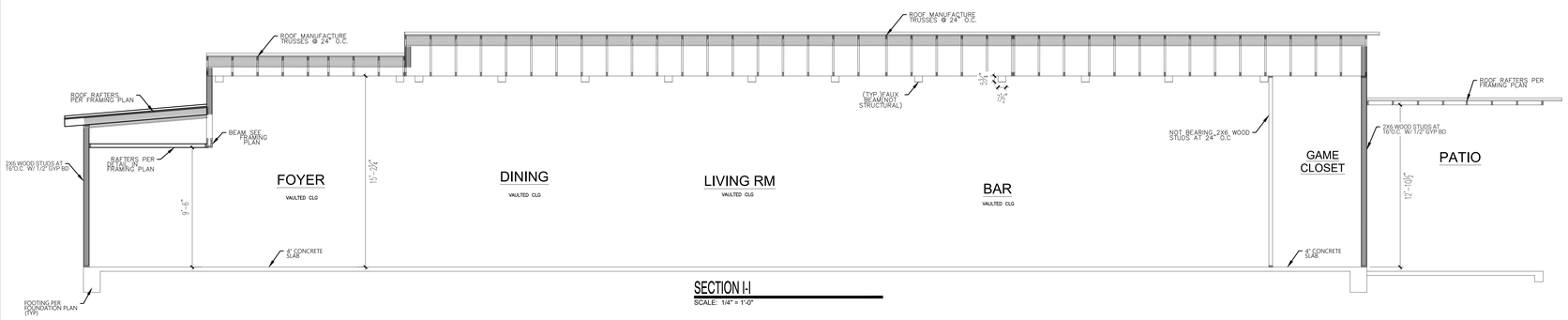

SECTION I-I
SCALE: 1/4" = 1'-0"

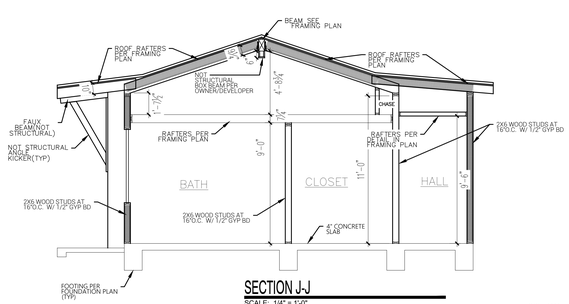

SECTION J-J
SCALE: 1/4" = 1'-0"

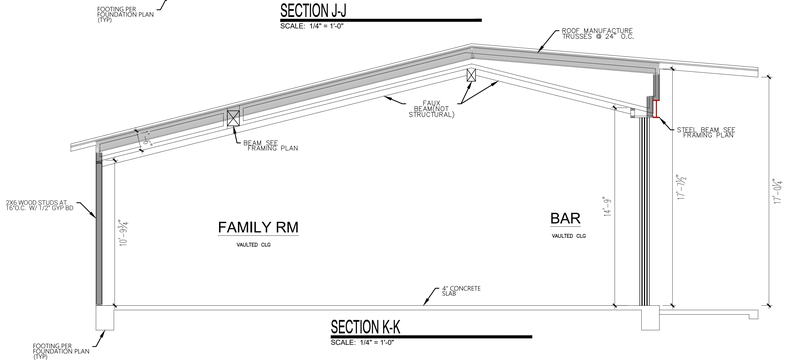

SECTION K-K
SCALE: 1/4" = 1'-0"

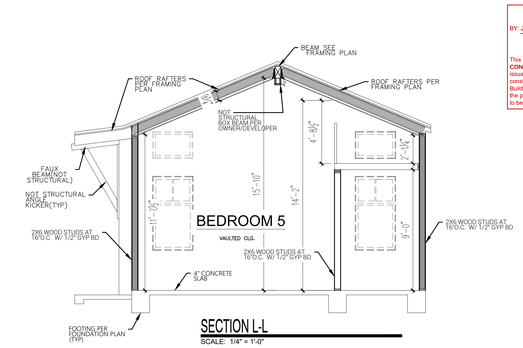

SECTION L-L
SCALE: 1/4" = 1'-0"

CITY OF PHOENIX
Planning and Development Department
BY: Justine Cornelius
05/11/2023
This set of plans has been reviewed for **PHOENIX CONSTRUCTION CODE** requirements prior to issuance of Building Permit and shall be kept at the construction site. Such review shall not prevent the Building Official from requiring correction of errors in the plans where such errors are subsequently found to be in violation of any law or ordinance.

THE INFORMATION CONTAINED ON THESE DRAWINGS SUCH AS DATA, DESIGNS, AND CONCEPTS, ARE PROPERTY OF PROCADESIGN LLC. AND SHALL NOT BE USED FOR ANY OTHER PURPOSE OTHER THAN ORIGINALLY INTENDED WITHOUT WRITTEN PERMISSION OF THE DESIGNER/CONSULTANT.

#	REVISIONS	DATE
1	CITY COMMENTS	12/12/2022
2	CITY COMMENTS	4/5/2023

DANCO RESIDENCE
4441 N JOKAKE DR SCOTTSDALE AZ 85251
172-29-017

DRAWN BY:
PROCA DESIGN
CONTACT #
www.procadesign.net
(602) 606-2885
angelica@procadesign.com

DATE:
OCT. 2020
SCALE:
PER PLAN
SHEET:
A3.1

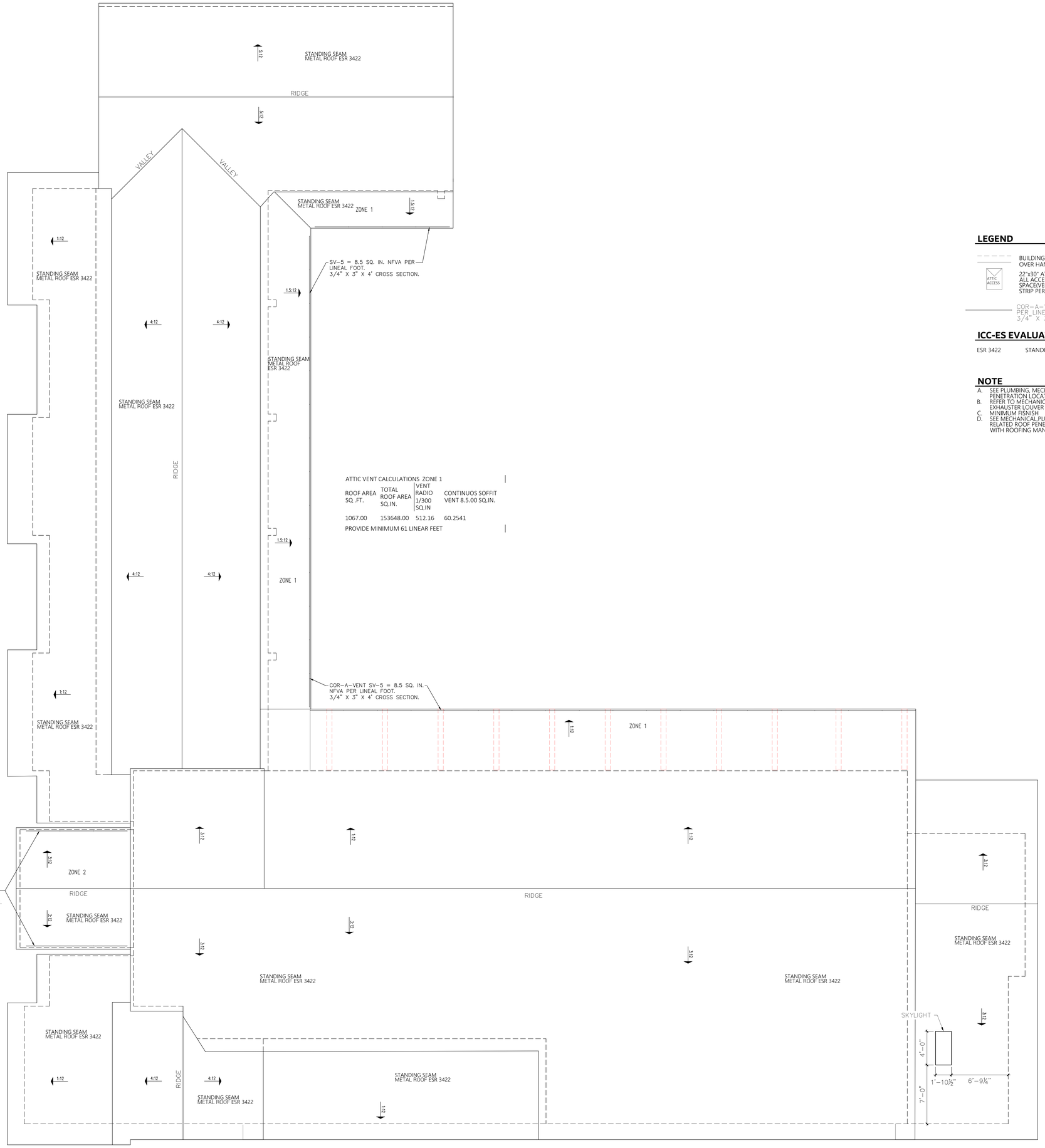

ATTIC VENT CALCULATIONS ZONE 1

ROOF AREA SQ .FT.	TOTAL ROOF AREA SQ.IN.	VENT RADIO 1/300 SQ.IN	CONTINUOS SOFFIT VENT 8.5.00 SQ.IN.
1067.00	153648.00	512.16	60.2541

PROVIDE MINIMUM 61 LINEAR FEET

ATTIC VENT CALCULATIONS ZONE 2

ROOF AREA SQ .FT.	TOTAL ROOF AREA SQ.IN.	VENT RADIO 1/300 SQ.IN	CONTINUOS SOFFIT VENT 8.5.00 SQ.IN.
189.00	27216.00	90.72	10.6729

PROVIDE MINIMUM 11 LINEAR FEET

LEGEND

BUILDING / COLUMN LINE
OVER HANG LINE

ATTIC ACCESS

22"x30" ATTIC ACCESS-PROVIDE 30" HEADROOM AT ALL ACCESS LOCATIONS. A.H.U. LOCATED IN ATTIC SPACE(VERIFY LOCATION). INSULATE AND WEATHER STRIP PER IRC SECTION N1102.2.4.

COR-A-VENT SV-5 = 8.5 SQ. IN. NFVA PER LINEAL FOOT. 3/4" X 3" X 4" CROSS SECTION.

ICC-ES EVALUATION REPORT

ESR 3422 STANDING SEAM METAL ROOF

NOTE

A. SEE PLUMBING, MECHANICAL & ELECTRICAL PLANS FOR ROOF PENETRATION LOCATION AND SIZE.
B. REFER TO MECHANICAL DWG FOR LOCATION OF INTAKE AN EXHAUSTER LOUVER OR FANS.
C. MINIMUM FISNISH
D. SEE MECHANICAL,PLUMBING AND ELECTRICAL PLANS FOR RELATED ROOF PENETRATION AND CURB DETAILS. COORDINATE WITH ROOFING MANUFACTURER'S DETAILS AND REQUIREMENTS

CITY OF PHOENIX
Planning and Development Department
BY: Justine Cornelius
05/11/2023
This set of plans has been reviewed for **PHOENIX CONSTRUCTION CODE** requirements prior to issuance of Building Permit and shall be kept at the construction site. Such review shall not prevent the Building Official from requiring correction of errors in the plans where such errors are subsequently found to be in violation of any law or ordinance.

MAIN ROOF PLAN
SCALE: 1" = 1'-0"

NORTH

PROCA DESIGN LLC

THE INFORMATION CONTAINED ON THESE DRAWINGS SUCH AS DATA, DESIGNS, AND CONCEPTS, ARE PROPERTY OF PROCADESIGN LLC. AND SHALL NOT BE USED FOR ANY OTHER PURPOSE OTHER THAN ORIGINALLY INTENDED WITHOUT WRITTEN PERMISSION OF THE DESIGNER/CONSULTANT.

#	REVISIONS	DATE
1	CITY COMMENTS	12/12/2022
2	CITY COMMENTS	4/5/2023

DANCO RESIDENCE
4441 N JOKAKE DR SCOTTSDALE AZ 85251
172-29-017

DRAWN BY:
PROCA DESIGN
CONTACT #
www.procadesign.net
(602) 606-2885
angelica@procadesign.com

DATE:
OCT. 2020

SCALE:
PER PLAN

SHEET:
A4

REFLECTIVE CEILING PLAN

SCALE: 3/8" = 1'-0"

NORTH

CITY OF PHOENIX
Planning and Development Department
BY: Justine Cornelius
05/11/2023
This set of plans has been reviewed for **PHOENIX CONSTRUCTION CODE** requirements prior to issuance of Building Permit and shall be kept at the construction site. Such review shall not prevent the Building Official from requiring correction of errors in the plans where such errors are subsequently found to be in violation of any law or ordinance.

PROCA DESIGN LLC

THE INFORMATION CONTAINED ON THESE DRAWINGS SUCH AS DATA, DESIGNS, AND CONCEPTS, ARE PROPERTY OF PROCADESIGN LLC. AND SHALL NOT BE USED FOR ANY OTHER PURPOSE OTHER THAN ORIGINALLY INTENDED WITHOUT WRITTEN PERMISSION OF THE DESIGNER/CONSULTANT.

#	REVISIONS	DATE
1	CITY COMMENTS	12/12/2022
2	CITY COMMENTS	4/5/2023

DANCO RESIDENCE

4441 N JOKAKE DR SCOTTSDALE AZ 85251

172-29-017

DRAWN BY:
PROCA DESIGN
CONTACT #
www.procadesign.net
(602) 606-2885
angelica@procadesign.com

DATE:
OCT. 2020

SCALE:
PER PLAN

SHEET:

AD

BUILDING CODE:

2018 EDITION OF THE INTERNATIONAL BUILDING CODE, WITH CITY OF PHOENIX AMENDMENTS.

LOADS:

ROOFS:

ROOF LIVE LOAD = 20 PSF (REDUCIBLE).ROOF DEAD LOAD = 16 PSF.

NET WIND UPLIFT = 15 PSF. (DESIGN BASED ON 0.6D - 0.6W)
ALL PREFABRICATED WOOD ROOF TRUSSES SHALL BE DESIGNED FOR A SUPERIMPOSED FUTURE MECHANICAL LOAD OF 300 LB AT ANY LOCATION.

LATERAL:

WIND:

ULTIMATE DESIGN WIND SPEED (3-SECOND GUST), V(ult) = 115 MPH.
WIND IMPORTANCE FACTOR = 1.00.
EXPOSURE: C.
RISK CATEGORY: II
INTERNAL PRESSURE COEFFICIENT = +0.18/-0.18.
COMPONENTS AND CLADDING WIND LOADS (10SF LOADED AREA):
ROOF ZONE 1 = -26.6PSF.
ROOF ZONE 2 = -46.2 PSF.
ROOF ZONE 3 = -68.4PSF.
WALL ZONE 4 = +29.0/-31.5 PSF.
WALL ZONE 5 = +29.0/-38.9 PSF.

SEISMIC:

SEISMIC IMPORTANCE FACTOR, I = 1.00.
RISK CATEGORY: II.
MAPPED SHORT PERIOD SPECTRAL ACCELERATION, S_S = 0.19.
MAPPED ONE SECOND SPECTRAL ACCELERATION, S_1 = 0.067.
SOIL SITE CLASS: D.
DESIGN SHORT PERIOD SPECTRAL ACCELERATION, S_{DS} = 0.202.
DESIGN ONE SECOND SPECTRAL ACCELERATION, S_{D1} = 0.107.
SEISMIC DESIGN CATEGORY: B.
BASIC SEISMIC-FORCE-RESISTING SYSTEM =LIGHT FRAME WOOD WALLS WITH STRUCTURAL WOOD SHEAR PANELS.
SEISMIC RESPONSE COEFFICIENT, C_s = 0.031.
RESPONSE MODIFICATION FACTOR (R) = 6-1/2.
ANALYSIS PROCEDURE USED = EQUIVALENT LATERAL FORCE PROCEDURE.

FOR DEFLECTION/CAMBER CRITERIA OF STRUCTURAL MEMBERS ENGINEERED BY OTHERS, SEE SPECIFIC MEMBER'S SECTION BELOW.

FOUNDATIONS:

1 DESIGN BASED ON SOILS INVESTIGATION REPORT PROVIDED BY SCOTT R. SMITH, P.E. THE PROJECT NO. IS 2022-172-29-017 DATED JANUARY 10, 2022. ISOLATED AND CONTINUOUS FOOTINGS SHALL BEAR ON FIRM, UNDISTURBED SOIL (CONTROLLED COMPACTED FILL) 18" MINIMUM BELOW ADJACENT FINISHED GRADE OR EXISTING GRADE AS STATED IN SOILS REPORT. FINISHED GRADE IS DEFINED AS TOP OF SLAB FOR INTERIOR FOOTINGS AND LOWEST ADJACENT GRADE WITHIN 5 FEET FOR PERIMETER FOOTINGS.

DESIGN SOIL BEARING VALUE = 1500 PSF. REFER TO SOILS INVESTIGATION REPORT FOR ADDITIONAL INFORMATION PRIOR TO COMMENCEMENT OF EARTHWORK. SOILS ENGINEER SHALL INSPECT FOUNDATION EXCAVATIONS PRIOR TO PLACEMENT OF CONCRETE.

CONCRETE:

SPECIFIED 28 DAY COMPRESSIVE STRENGTH F'c:

FOUNDATIONS (DESIGN BASED ON 2,500 PSI)	3,000 PSI
EXTERIOR SLAB ON GRADE	3,000 PSI
INTERIOR SLAB ON GRADE	3,000 PSI

GENERAL:

ALL CAST-IN-PLACE CONCRETE CONSTRUCTION SHALL CONFORM TO THE LATEST EDITION OF THE ACI. MECHANICALLY VIBRATE ALL CONCRETE WHEN PLACED UNLESS NOTED OTHERWISE. ADMIXTURES CONTAINING CHLORIDES SHALL NOT BE USED. NO OTHER ADMIXTURES PERMITTED WITHOUT APPROVAL. FOR CONCRETE WITHOUT PLASTICIZER, MAXIMUM SLUMP 4 1/2" AT POINT OF PLACEMENT U.N.O. IF PLASTICIZER IS USED, A HIGHER FINAL SLUMP MAY BE ALLOWED UPON STRUCTURAL ENGINEER'S APPROVAL.

FOR REINFORCING INFORMATION, SEE REINFORCING SECTION OF G.S.N., PLANS, SCHEDULES AND DETAILS.

UNLESS NOTED OTHERWISE ON THE DRAWINGS, THE EMBEDMENT OF CONDUITS, PIPES, SLEEVES, ETC. OF ANY MATERIAL SHALL NOT BE PERMITTED WITHIN ANY CONCRETE STRUCTURAL ELEMENT (IE: COLUMNS, BEAMS, ELEVATED SLABS, ETC.) OR STRUCTURAL CONCRETE TOPPINGS WITHOUT THE EXPRESSED APPROVAL OF THE STRUCTURAL ENGINEER.

FLY ASH - IF PERMITTED BY ARCHITECTURAL SPECIFICATIONS, SHALL BE LIMITED TO 25% OF TOTAL CEMENTITIOUS MATERIALS BY WEIGHT. FLY ASH SHALL BE INCLUDED IN THE CALCULATION OF W/C RATIOS SPECIFIED ABOVE. FLY ASH ADDITIVES SHALL NOT BE USED ON SLABS WITH A BURNISHED OR ACID FINISH.

TEST DATA FOR EACH CONCRETE MIX SHALL BE SUBMITTED FOR REVIEW PER CHAPTER 5 OF ACI 318. REFERENCE FIGURE R5.3 FOR SUBMITTAL REQUIREMENTS AND OPTIONS. CONCRETE MIX DESIGNS THAT ARE SUBMITTED WITHOUT THE APPROPRIATE TEST DATA CANNOT BE REVIEWED.

SLABS ON GRADE:

MAXIMUM SLUMP WITHOUT PLASTICIZER AT POINT OF PLACEMENT SHALL BE 5 INCHES. MIX DESIGNS SHALL TAKE CARE TO PROVIDE THE LARGEST POSSIBLE SIZE OF COURSE AGGREGATE WHILE MAINTAINING CONCRETE WORKABILITY. NOMINAL MAXIMUM AGGREGATE SIZE SHALL NOT BE LESS THAN 3/4 INCH NOR MORE THAN 1/3 THE DEPTH OF THE SLAB. MIX DESIGNERS SHALL SUBMIT SLAB ON GRADE DESIGNS WITH SHRINKAGE CHARACTERISTICS NOT EXCEEDING 0.00078 IN/IN TO MEET THE REQUIREMENTS OF ACI 360R-06, FIG5.6 FOR TYPICAL CONCRETE. SLABS SHALL BE PLACED ON A FLAT, SMOOTH, FIRM, COMPACTED SUBGRADE.

CONCRETE SHALL BE MIXED, PLACED, FINISHED AND CURED PER LATEST EDITION OF ACI 302.1 FOR THE APPROPRIATE FLOOR CLASS TYPE PER TABLE 1.1 AND SECTION 7. CURING COMPOUND SHALL BE COMPATIBLE WITH ARCHITECTURAL FLOOR FINISH.

SLABS ON GRADE SHALL BE VIBRATED ONLY AT TRENCHES, FLOOR DUCTS, TURNDOWNS, ETC. CAST CLOSURE POUR AROUND COLUMNS AFTER COLUMN DEAD LOAD IS APPLIED. UNLESS APPROVED OTHERWISE IN WRITING BY THE ARCHITECT, ALL CONCRETE SLABS ON GRADE SHALL BE BOUND BY CONTROL JOINTS (CONSTRUCTION OR SAW CUT) PER TYPICAL DETAILS, AS SHOWN ON THE FOUNDATION PLAN, SUCH THAT THE ENCLOSED AREA DOES NOT EXCEED 150 SQUARE FEET. CONSTRUCTION CONTROL JOINTS NEED ONLY OCCUR AT EXPOSED EDGES DURING POURING, ALL OTHER JOINTS MAY BE SAW CUT. SLAB REINFORCING, WHERE SHOWN, SHALL NOT EXTEND MORE THAN 125 FEET WITHOUT STOPPING THE REINFORCEMENT AT A CONTROL JOINT.

VAPOR BARRIER IF REQUIRED BY ARCHITECTURAL SPECIFICATION OR SOILS REPORT SHALL CONSIST OF A MINIMUM 10 MIL MATERIAL LAPPED A MINIMUM OF 6 INCHES AND TAPED PER MANUFACTURER RECOMMENDATIONS. THE BARRIER SHALL BE PLACED ON TOP OF A SMOOTH AND COMPACTED SUBGRADE SURFACE. THE FLOOR SLAB SHALL BE PLACED OVER A FOUR INCH LAYER OF COMPACTED AGGREGATE BASE COURSE ON TOP OF THE VAPOR BARRIER. ANY DAMAGE TO VAPOR BARRIER SHALL BE REPAIRED PRIOR TO AGGREGATE COURSE PLACEMENT. CARE SHALL BE TAKEN TO KEEP MOISTURE AWAY FROM THE COMPACTED SUBBASE. SUBGRADE MUST BE ALLOWED TO DRY AFTER RAINS PRIOR TO SLAB PLACEMENT. FLOOD CURING IS NOT ALLOWED. SAND IS NOT AN ALTERNATIVE FOR THE SUBBASE COURSE.

REINFORCING:

ALL REINFORCING PER CRSI SPECIFICATIONS AND HANDBOOK. ASTM A615 (Fy = 60 KSI / GRADE 60) DEFORMED BARS FOR ALL BARS #5 AND LARGER. ASTM A615 (Fy = 40 KSI / GRADE 40) DEFORMED BARS FOR ALL BARS #4 AND SMALLER. WHERE SHOWN ON DRAWINGS ALL GRADE 60 REINFORCING TO BE WELDED SHALL BE ASTM A706. WELDED WIRE FABRIC PER ASTM A185, WIRE PER ASTM A82. NO TACK WELDING OF REINFORCING BARS ALLOWED WITHOUT PRIOR REVIEW OF PROCEDURE WITH THE STRUCTURAL ENGINEER. LATEST ACI CODE AND DETAILING MANUAL APPLY. CLEAR CONCRETE COVERAGES AS FOLLOWS:

CAST AGAINST AND PERMANENTLY EXPOSED TO EARTH	3"
EXPOSED TO EARTH OR WEATHER	
#6 OR LARGER	2"
#5 AND SMALLER	1 1/2"

ALL REINFORCING SHALL BE CHAIRED TO ENSURE PROPER CLEARANCES. SUPPORT OF FOUNDATION REINFORCING MUST PROVIDE ISOLATION FROM MOISTURE/CORROSION BY USE OF A PLASTIC OR CONCRETE CHAIR. DUCT-TAPE COVERED REINFORCING IS NOT AN ACCEPTABLE CHAIR.

ALL DIMENSIONS REFERENCED IN DRAWINGS AS "CLEAR" SHALL BE FROM FACE OF STRUCTURE TO EDGE OF REINFORCING, AND SHALL NOT BE LESS THAN STATED, NOR GREATER THAN "CLEAR" DIMENSION PLUS 3/8". ALL OTHERS SHALL BE PLUS OR MINUS 1/4" TYPICAL UNLESS NOTED OTHERWISE.

FIELD BENDING OR STRAIGHTENING OF DEFORMED BARS SHALL BE LIMITED TO #5 BARS AND SMALLER AND SHALL BE FIELD BENT OR STRAIGHTENED ONLY ONCE. ANY BEND SHALL BE LIMITED TO 90 DEGREES. IF FIELD BENDING OR STRAIGHTENING OF #6 BARS OR LARGER IS REQUIRED, OR IF A SECOND BEND IS REQUIRED FOR #5 BARS AND SMALLER, HEAT SHALL BE APPLIED FOR BENDING OR STRAIGHTENING. CONTRACTOR SHALL SUBMIT PROCEDURE FOR APPLYING HEAT TO ENGINEER FOR REVIEW AND APPROVAL PRIOR TO BENDING OR STRAIGHTENING BARS.

LAP SPLICES IN CONCRETE:

ALL SPLICE LOCATIONS SUBJECT TO APPROVAL BY THE STRUCTURAL ENGINEER. PROVIDE BENT CORNER BARS TO MATCH AND LAP WITH HORIZONTAL BARS AT ALL CORNERS AND INTERSECTIONS PER TYPICAL DETAILS. REINFORCING BAR SPACING GIVEN ARE MAXIMUM ON CENTERS. DOWEL VERTICAL REINFORCING TO FOUNDATION WITH STANDARD 90-DEGREE HOOKS UNLESS NOTED OTHERWISE. SECURELY TIE ALL BARS IN LOCATION BEFORE PLACING CONCRETE.

LAP SPLICES, UNLESS NOTED OTHERWISE, SHALL BE CLASS "B" TENSION LAP SPLICES PER LATEST EDITION OF ACI 318.

LAPS IN WELDED WIRE FABRIC SHALL BE MADE SO THAT THE OVERLAP, MEASURED BETWEEN OUTERMOST CROSS WIRES OF EACH FABRIC SHEET, IS NOT LESS THAN THE SPACING OF CROSS WIRES PLUS 2 INCHES.

DRYPACK:

DRYPACK SHALL BE 5,000 PSI NON-SHRINK GROUT, FIVE STAR OR EQUIVALENTS. INSTALL DRYPACK UNDER BEARING PLATES BEFORE FRAMING MEMBER IS INSTALLED. AT COLUMNS, INSTALL DRYPACK UNDER BASE PLATES AFTER THE STRUCTURAL STEEL FRAME HAS BEEN PLUMBED BUT PRIOR TO SUPPORTED DECKING BEING INSTALLED.

MASONRY:

GENERAL:

HOLLOW CONCRETE MASONRY UNITS SHALL CONFORM TO ASTM C90, MEDIUM WEIGHT, GRADE N, F'm = 1,500 PSI, RUNNING BOND, MORTAR TYPE S, 1,800 PSI. GROUT 2,000 PSI. MECHANICALLY VIBRATE GROUT IMMEDIATELY AFTER POURING AND AGAIN 5 TO 10 MINUTES LATER. PROVIDE CLEANOUTS IF GROUT LIFT EXCEEDS 5'-0" IN BLOCK WALLS. MAXIMUM GROUT LIFT SHALL BE 6'-0". WHEN APPROVED BY THE STRUCTURAL ENGINEER AND BUILDING OFFICIAL, GROUT LIFTS MAY BE GREATER THAN 6'-0" IF IT CAN BE DEMONSTRATED BY CONTRACTOR THAT THE GROUT SPACES CAN BE PROPERLY FILLED. FILL CELLS SOLIDLY WITH GROUT IN LIFTS AND STOP POURS 1 1/2" BELOW THE TOP OF A COURSE TO FORM A KEY AT POUR POINTS. UNLESS NOTED OTHERWISE ON THE PLANS, PLACE CONTROL JOINTS IN MASONRY WALLS SUCH THAT NO STRAIGHT RUNS OF WALL EXCEEDS 24'-0". CONTROL JOINTS SHALL NOT OCCUR AT WALL CORNERS, INTERSECTIONS, ENDS, WITHIN 24" OF CONCENTRATED POINTS OF BEARING OR JAMBS, OR OVER OPENINGS UNLESS SPECIFICALLY SHOWN ON THE STRUCTURAL DRAWINGS. ALL MASONRY BELOW FINISHED FLOOR OR GRADE SHALL BE GROUTED SOLID.

VERTICAL REINFORCING:

1 #5 IN CENTER OF GROUT AT CENTER OF WALL, CONTINUOUS FULL HEIGHT OF WALL AT ALL CORNERS, INTERSECTIONS, WALL ENDS, BEAM BEARINGS, JAMBS, EACH SIDE OF CONTROL JOINTS AND AT INTERVALS NOT TO EXCEED 48" O.C. UNLESS NOTED OTHERWISE. TIE AT 8'-0" VERTICALLY, WITH SINGLE WIRE LOOP TIE BY A.A. WIRE PRODUCTS COMPANY. DOWEL VERTICAL REINFORCING TO FOUNDATION WITH DOWELS TO MATCH VERTICAL REINFORCING.

HORIZONTAL REINFORCING:

2 #5 IN MINIMUM 8" DEEP GROUTED CONTINUOUS BOND BEAM AT ELEVATED FRAMING ASSEMBLIES. 1 #5 IN MINIMUM 8" DEEP GROUTED CONTINUOUS BOND BEAM AT TOP OF PARAPETS AND FREESTANDING WALLS. PLACE THESE BARS CONTINUOUS THRU CONTROL JOINTS PER TYPICAL DETAIL. TO MAINTAIN BOND BEAM CONTINUITY, INSTALL BENT BARS PER TYPICAL DETAILS TO MATCH HORIZONTAL BOND BEAM REINFORCING AT CORNERS AND INTERSECTIONS. STANDARD WEIGHT (NO. 9 GAGE WIRE) DUR-O-WAL OR DUR-O-WIRE (OR EQUIVALENT) LADDER TYPE JOINT REINFORCEMENT AT 16" O.C. ALL JOINT REINFORCING SHALL BE EITHER HOT-DIPPED GALVANIZED OR STAINLESS STEEL. FOR INTERIOR WALLS ONLY - JOINT REINFORCING MAY BE MILL GALVANIZED AT CONTRACTORS OPTION.

LAP SPLICES:

LAP SPLICES FOR VERTICAL AND HORIZONTAL REINFORCING SHALL BE PER TYPICAL DETAIL. DO NOT SPLICE WITHIN 8'-0" OF CONTROL JOINTS. LAP HORIZONTAL LADDER TYPE JOINT REINFORCING 12" MINIMUM.

FOR ADDITIONAL REINFORCING INFORMATION, SEE REINFORCING SECTION OF G.S.N., PLANS, SCHEDULES AND DETAILS.

STRUCTURAL STEEL:

GENERAL:

ALL CONSTRUCTION PER LATEST AISC STEEL CONSTRUCTION MANUAL. ALL WIDE FLANGE STEEL SHALL BE ASTM A992 (Fy = 50 KSI). ALL PIPE STEEL SHALL BE ASTM A500 (Fy = 42 KSI) OR ASTM A53, TYPE E OR S, GRADE B (Fy = 35 KSI). ALL TUBE STEEL SHALL BE ASTM A500 (Fy = 46 KSI).
ALL MISCELLANEOUS STEEL UNLESS NOTED OTHERWISE SHALL BE ASTM A36 (Fy = 36 KSI). THE TERMS PIPE AND ROUND HOLLOW STRUCTURAL SHAPE (HSS) ARE USED SYNONYMOUSLY THROUGHOUT THESE DOCUMENTS ALONG WITH THE TERMS TUBE STEEL AND RECTANGULAR OR SQUARE HSS.

ALL STRUCTURAL ROLLED STEEL MEMBERS WITH Fy GREATER THAN 36 KSI ARE TO BE IDENTIFIED WITH AN ASTM SPECIFICATION MARK OR TAG PER IBC SEC. 2203.1.

UNLESS NOTED OTHERWISE, ALL BOLTS SHALL BE ASTM A307. ALL BOLTS SHALL BE INSTALLED WITH STEEL WASHERS AT SHORT SLOTTED HOLES USING SNUG TIGHT INSTALLATION, UNLESS NOTED OTHERWISE.

ANCHOR RODS:

ANCHOR RODS INCLUDE HOOKED, HEADED, AND THREADED AND NUTTED ANCHORS. THE TERMS ANCHOR BOLT AND ANCHOR ROD ARE USED SYNONYMOUSLY THROUGHOUT THESE DOCUMENTS. ALL ANCHOR ROD MATERIAL SHALL BE PER ASTM F1554 GRADE 36. A307 ANCHOR RODS MAY BE SUBSTITUTED FOR ASTM F1554 GRADE 36 AT CONTRACTOR'S OPTION. ALL ANCHOR RODS SHALL BE INSTALLED WITH STEEL WASHERS AT OVERSIZED ROUND HOLES USING SNUG TIGHT INSTALLATION, UNLESS NOTED OTHERWISE.

THE ANCHORING MECHANISM FOR NUTTED ANCHOR RODS SHALL CONSIST OF DOUBLE NUTS WITH A WASHER BETWEEN. THE NUTS AND WASHER ARE TO BE EMBEDDED INTO THE CONCRETE PER THE DETAILS AND PLANS. THE WASHER SHALL BE 1/4"X4"X4" U.N.O. THE CONTRACTOR SHALL PREVENT THE NUTS FROM SPINNING OFF DURING THE VIBRATION OF THE CONCRETE. THIS COULD BE ACCOMPLISHED BY TIGHTENING THE NUTS AGAINST EACH OTHER THEREBY LOCKING THEM IN PLACE OR BY TACK WELDING EACH NUT TO THE ANCHOR ROD.

WHERE THE ANCHORS ARE TO BE GALVANIZED, THE ANCHOR ROD AND THE NUTS SHALL BE GALVANIZED WITH THE SAME PROCESS TO ENSURE THE THREADS MATCH.

AT CONTRACTOR'S OPTION HEADED ANCHORS PER ABOVE MAY BE SUBSTITUTED FOR CONVENTIONAL ANCHORS AND MACHINE BOLTS (REVERSE SUBSTITUTION NOT ALLOWABLE).

EXPANSION AND EPOXY ANCHORS:

ALL EXPANSIVE ANCHORAGE FOR CONCRETE INSTALLATION ONLY SHALL BE PER SIMPSON 'STRONG-BOLT' 2 WEDGE ANCHOR (ICC ESR-3037) OR APPROVED EQUIVALENT. ALL EXPANSIVE ANCHORAGE FOR MASONRY INSTALLATION ONLY SHALL BE PER SIMPSON 'WEDGE-ALL' ANCHOR (ICC ESR-1396) OR APPROVED EQUIVALENT. ALL ADHESIVE (EPOXY) ANCHORAGE FOR CONCRETE SHALL BE PER SIMPSON 'SET-XP' SYSTEM WITH DUAL SIDE BY SIDE CARTRIDGES (ICC ESR-2508) OR APPROVED EQUIVALENT. ALL ADHESIVE (EPOXY) ANCHORAGE FOR MASONRY SHALL BE PER SIMPSON 'SET' SYSTEM WITH DUAL SIDE BY SIDE CARTRIDGES (ICC ESR-1772) OR APPROVED EQUIVALENT. ALL ANCHORS SHALL BE INSTALLED WITH STEEL WASHERS AT SHORT SLOTTED HOLES AND TIGHTENED/TORQUED PER MANUFACTURERS RECOMMENDATIONS.

STEEL ERECTION NOTE:

PER OSHA, STEEL MEMBERS AND DIAGONAL BRACING CANNOT BE RELEASED FROM HOISTING CABLES UNTIL ALL BOLTS OR WELDS AT MEMBER ENDS ARE COMPLETE.

HIGH STRENGTH BOLTS:

ALL HIGH STRENGTH BOLTS SHALL BE ASTM A325N AND SHALL BE INSTALLED AS BEARING TYPE CONNECTIONS WITH THREADS INCLUDED IN SHEAR PLANE. INSTALL WASHERS AND TIGHTEN "SNUG TIGHT" PER AISC SPECIFICATIONS. NO DIRECT TENSION INDICATOR TIGHTENING DEVICES OR ALTERNATE DESIGN FASTENERS ARE PERMITTED WITH "SNUG TIGHT" APPLICATIONS WITHOUT PRIOR APPROVAL OF THE STRUCTURAL ENGINEER. FOR ADDITIONAL INFORMATION, SEE ABOVE.

WELDING:

UNLESS NOTED OTHERWISE, ALL WELDS PER LATEST EDITION OF THE AWS STANDARDS. ALL WELDING SHALL BE PERFORMED BY WELDERS HOLDING VALID CERTIFICATES AND HAVING CURRENT EXPERIENCE IN THE TYPE OF WELD SHOWN ON THE DRAWINGS OR NOTES. CERTIFICATES SHALL BE THOSE ISSUED BY AN ACCEPTED TESTING AGENCY. ALL WELDING DONE BY E70 SERIES LOW HYDROGEN RODS UNLESS NOTED OTHERWISE. FOR GRADE 60 REINFORCING BARS, USE E90 SERIES. THESE DRAWINGS DO NOT DISTINGUISH BETWEEN SHOP AND FIELD WELDS; THE CONTRACTOR MAY SHOP WELD OR FIELD WELD AT THEIR DISCRETION. SHOP WELDS AND FIELD WELDS SHALL BE SHOWN ON THE SHOP DRAWINGS SUBMITTED FOR REVIEW.

ALL FULL (COMPLETE) PENETRATION WELDS SHALL BE TESTED AND CERTIFIED BY AN INDEPENDENT TESTING LABORATORY.

WOOD:

GENERAL:

WOOD FRAMING MEMBERS SHALL NOT BE NOTCHED OR DRILLED WITHOUT PRIOR APPROVAL OF THE STRUCTURAL ENGINEER THROUGH THE ARCHITECT. ALL NAILING NOT NOTED SHALL BE PER TYPICAL DETAIL AND COMMON NAIL DIAMETER TABLE BELOW. ALL BOLTING SHALL BE PER STRUCTURAL STEEL SECTION ABOVE. WOOD CONNECTORS SHALL BE AS MANUFACTURED BY SIMPSON STRONG-TIE COMPANY, INC. OR OTHER MANUFACTURER WITH CURRENT AND EQUIVALENT ICC APPROVAL. WHERE "TYPE" OF CONNECTOR IS INDICATED ON THE DRAWINGS, THE CONNECTOR AND ATTACHMENT SHALL BE PER THE MAXIMUM MODEL NUMBER BASED ON THE SIZE OF THE MEMBERS CONNECTED.

NAIL TYPE	DIA.	GAUGE	LENGTH	NAIL TYPE	DIA.
6d	0.113”	11 ½	2”	12d	0.148”
8d	0.131”	10 ¼	2 ½”	16d	0.162”
10d	0.148”	9	3”	20d	0.192”
SHEAR WALL			SEE SHEAR WALL SCHEDULE FOR MORE INFORMATION		

IN STUD WALLS, UNLESS NOTED OTHERWISE, INSTALL DOUBLE STUDS AT ALL JAMBS, CORNERS, INTERSECTION AND AT ISOLATED BEARING POINTS OF FRAMING MEMBERS ABOVE. EVERY OTHER STUD OF WOOD FRAME BEARING WALL SHALL HAVE A SIMPSON H3 ANCHOR TOP AND BOTTOM, EXCEPT AT THOSE WALLS WHERE PLYWOOD SHEATHING IS NAILED DIRECTLY TO THE TOP AND BOTTOM PLATES. PROVIDE 2X SOLID BLOCKING AT MID-HEIGHT OF BEARING STUD WALLS.

PROVIDE 2" SOLID BLOCKING AT SUPPORTS OF ALL JOISTS. DOUBLE UP FLOOR JOISTS AND BLOCKING UNDER PARTITIONS.

DO NOT SUSPEND ANY SPRINKLERS, PIPING, CEILINGS OR ANY OTHER ITEMS FROM 2X4 (PANELIZED) JOISTS IN PANELIZED ROOF SYSTEM.

SAWN LUMBER:

FRAMING LUMBER SHALL COMPLY WITH THE LATEST EDITION OF THE GRADING RULES OF THE WWPA OR THE WCLIB. ALL SAWN LUMBER SHALL BE STAMPED WITH THE GRADE MARK OF AN APPROVED LUMBER GRADING AGENCY AND SHALL HAVE MINIMUM PROPERTIES WHICH MEET OR EXCEED THE FOLLOWING WOOD TYPES:

JOISTS	WOOD TYPE
2 X 4 (PANELIZED)	H.F. #2
2 X 4	H.F. #2
2 X 6 OR LARGER	D.F.L. #2
BEAMS	
WIDTH 4" OR LESS	D.F.L. #2
WIDTH GREATER THAN 4"	D.F.L. #1
LEDGERS AND TOP PLATES	D.F.L. #2
STUDS	
2 X 4	D.F.L. #2
2 X 6 OR LARGER	D.F.L. #2
POSTS	
4 X 4	D.F.L. #2
4 X 6 OR LARGER	D.F.L. #2
6 X 6 OR LARGER	D.F.L. #1

GLUED-LAMINATED BEAMS (GLULAM/GLB):

ALL STRUCTURAL GLUED-LAMINATED BEAMS SHALL MEET THE COMBINATION REQUIREMENTS FROM THE LATEST AITC-117 OR NATIONAL DESIGN SPECIFICATION. BEAMS FOR SINGLE SPAN CONDITIONS SHALL BE 24F-V4 DF, BEAMS CANTILEVERING OVER SUPPORTS SHALL BE 24F-V8 DF, WITH THE FOLLOWING MINIMUM PROPERTIES: Fb = 2,400 PSI, Fv = 240 PSI, Fc (PERPENDICULAR) = 650 PSI, E = 1,800,000 PSI. ALL BEAMS SHALL BE FABRICATED USING WATERPROOF GLUE. FABRICATION AND HANDLING PER LATEST AITC AND WCLA STANDARDS. SUPPLIER SHALL VERIFY WITH ARCHITECT THE GRADE FINISH OF ALL ARCHITECTURALLY EXPOSED FRAMING MEMBERS. BEAMS TO BEAR GRADE STAMP AND AITC STAMP AND CERTIFICATE. CAMBER AS SHOWN ON DRAWINGS. STANDARD CAMBER (STD) IS DEFINED AS RADIUS OF CURVATURE EQUAL TO 2500 FEET MINIMUM.

PREFABRICATED WOOD TRUSS FRAMING MEMBERS:

FRAMING MEMBERS SHALL BE DESIGNED TO SUPPORT SELF WEIGHT PLUS LIVE LOAD AND SUPERIMPOSED DEAD LOADS STATED IN THE GENERAL STRUCTURAL NOTES OR AS LOCATED ON PLANS. BRIDGING SIZE AND SPACING BY FABRICATOR UNLESS NOTED OTHERWISE. ALL CONNECTORS SHALL HAVE CURRENT ICC APPROVAL. FRAMING MEMBERS SHALL BE AGENCY STAMPED AND CONFORM TO THE GOVERNING CODE AND ANSI/TPI 1-2002. CONTRACTOR SHALL SUBMIT SHOP DRAWINGS, ERECTION DRAWINGS AND DESIGN CALCULATIONS SEALED BY A REGISTERED ENGINEER FOR REVIEW AND APPROVAL PRIOR TO FABRICATION. SAID SUBMITTAL, IN ADDITION TO LOADS SPECIFIED IN THE G.S.N. AND PLANS, SHALL INCLUDE, BUT NOT BE LIMITED TO, THE FOLLOWING:

A. DEFLECTION/CAMBER: FLOOR LIVE LOAD MAXIMUM = L/600 (L/480 FOR RESIDENTIAL). ROOFS WITHOUT PLASTER OR GYPBOARD CEILINGS TOTAL LOAD MAXIMUM = L/180, LIVE LOAD MAXIMUM = L/240. ROOFS WITH PLASTER OR GYPBOARD CEILINGS TOTAL LOAD MAXIMUM = L/240, LIVE LOAD MAXIMUM = L/360. FABRICATOR SHALL DESIGN MEMBERS FOR PONDING WHERE ROOF SLOPES ARE LESS THAN 1/4" PER FOOT. FRAMING MEMBERS SHALL BE CAMBERED FOR 1.5 TIMES THE DEAD LOAD DEFLECTION.

B. TOP CHORD MEMBER WOOD SPECIES SHALL HAVE A SPECIFIC GRAVITY OF 0.43 OR GREATER.

C. MULTIPLE FRAMING MEMBERS SHALL BE FASTENED TOGETHER TO ALLOW TRANSFER OF SHEAR AND TENSION FORCES (MINIMUM 200 PLF) AT PLYWOOD SHEATHING JOINTS AND TO PREVENT CROSS GRAIN BENDING OF TOP CHORDS. ATTACHMENT SHALL BE A CONTINUOUS 20 GAGE METAL PLATE OR OTHER APPROVED MEANS. METHOD OF ATTACHMENT SHALL BE INDICATED ON SHOP DRAWINGS FOR REVIEW.

D. SHALL SHOW ANY SPECIAL DETAILS REQUIRED AT BEARING POINTS.

VERIFY SIZE, WEIGHT AND LOCATION OF SUPPORTED EQUIPMENT WITH ARCHITECTURAL, MECHANICAL, PLUMBING, ELECTRICAL, SPRINKLER AND THEIR RELATED DRAWINGS. ADDITIONAL FRAMING MEMBERS SHALL BE SUPPLIED AS REQUIRED TO SUPPORT EQUIPMENT.

FABRICATOR SHALL HAVE ICC APPROVAL OR BE APPROVED ACCORDING TO THE BUILDING JURISDICTION.

PLYWOOD:

ALL PLYWOOD SHALL BE APA "CDX" RATED SHEATHING OR BETTER AND SHALL BEAR THE STAMP OF AN APPROVED TESTING AGENCY. LAY UP PLYWOOD WITH FACE GRAIN PERPENDICULAR TO SUPPORTS. (ON ROOFS WHERE PLYWOOD IS LAID UP WITH FACE GRAIN PARALLEL TO SUPPORTS, USE A MINIMUM OF 5-PLY PLYWOOD). STAGGER JOINTS. ALL NAILING, COMMON NAILS. WHERE SCREWS ARE INDICATED FOR WOOD TO WOOD ATTACHMENTS, USE WOOD SCREWS. ALL PLYWOOD SHALL BE OF THE FOLLOWING NOMINAL THICKNESS, SPAN/INDEX RATIO AND SHALL BE ATTACHED AS FOLLOWS UNLESS NOTED OTHERWISE:

APPLICATION	THICKNESS	SPAN/INDEX RATIO	EDGE ATTACHMENT	FIELD ATTACHMENT
ROOF	1/2” (15/32” MIN.)	32/16	8d AT 6” O.C.	8d AT 12” O.C.
FLOOR	3/4” (23/32” MIN.)	40/20	SCREWS AT 6” O.C.	SCREWS AT 12” O.C.
SHEAR WALL	3/8”	24/0	8d AT 6” O.C.	8d AT 12” O.C.
SHEAR WALL			SEE SHEAR WALL SCHEDULE FOR MORE INFORMATION	

SCREWS AT FLOOR SHEATHING SHALL BE #8 X 2 1/2" LONG FOR SHEATHING LESS THAN 1" THICK. ALL FLOOR SHEATHING SHALL BE GLUED TO SUPPORTING MEMBERS WITH APA AFG-01 QUALIFIED GLUE.

ATTACHMENT AT STEEL MEMBERS SHALL BE RAMSET/REDHEAD 1500SD SERIES, 0.14" DIAMETER X 1 1/2" LONG (3/4" PLYWOOD MAX), POWDER DRIVEN FASTENERS INSTALLED PER ICC ESR 1799, TABLE 4, OR APPROVED EQUIVALENT. SPACING SHALL BE AS NOTED ABOVE.

ALTERNATE:

APA PERFORMANCE RATED SHEATHING MAY BE USED AS AN ALTERNATE TO PLYWOOD WITH PRIOR APPROVAL OF OWNER, ARCHITECT AND INSTALLING CONTRACTOR. WHERE ROOFING, BALCONY WATERPROOFING, OR OUTDOOR DECK WATERPROOFING IS TO BE GUARANTEED, IT MAY NOT BE USED WITHOUT PRIOR APPROVAL FROM ROOFING OR WATERPROOFING SYSTEM MANUFACTURER. RATED SHEATHING SHALL COMPLY WITH APA PRP-108, EXPOSURE 1, AND SHALL HAVE A SPAN RATING AND SHEAR VALUES EQUIVALENT TO OR BETTER THAN THE PLYWOOD IT REPLACES. ATTACHMENT AND THICKNESS (WITHIN 1/32") SHALL BE THE SAME AS THE PLYWOOD IT REPLACES. INSTALL PER MANUFACTURER'S RECOMMENDATIONS.

SHOP DRAWINGS:

SHOP DRAWINGS SHALL BE SUBMITTED FOR ALL STRUCTURAL ITEMS IN ADDITION TO ITEMS REQUIRED BY ARCHITECTURAL SPECIFICATIONS. CONTRACTOR SHALL PROVIDE A MINIMUM OF 2 HARD COPY SUBMITTAL SETS OF EACH ITEM TO MSD FOR REVIEW, UNLESS NOTED OTHERWISE IN ARCHITECTURAL SPECIFICATIONS. ELECTRONIC SUBMITTALS ARE ALSO ACCEPTABLE.

THE CONTRACTOR SHALL REVIEW ALL SHOP DRAWINGS PRIOR TO SUBMITTAL. ITEMS NOT IN ACCORDANCE WITH CONTRACT DOCUMENTS SHALL BE FLAGGED UPON CONTRACTOR'S REVIEW.

VERIFY ALL DIMENSIONS WITH ARCHITECTURAL DRAWINGS AND FIELD CONDITIONS.

MANUFACTURER OR FABRICATOR SHALL CLOUD ANY CHANGES, SUBSTITUTIONS, OR DEVIATIONS FROM CONTRACT DOCUMENTS. ANY OF THE AFOREMENTIONED WHICH ARE NOT CLOUDED OR FLAGGED BY SUBMITTING PARTIES, SHALL NOT BE CONSIDERED APPROVED AFTER ENGINEER'S REVIEW, UNLESS NOTED ACCORDINGLY.

THE ENGINEER HAS THE RIGHT TO APPROVE OR DISAPPROVE ANY CHANGES TO CONTRACT DOCUMENTS AT ANYTIME BEFORE OR AFTER SHOP DRAWING REVIEW.

THE SHOP DRAWINGS DO NOT REPLACE THE CONTRACT DOCUMENTS. ITEMS OMITTED OR SHOWN INCORRECTLY AND ARE NOT FLAGGED BY THE STRUCTURAL ENGINEER OR ARCHITECT SHALL NOT BE CONSIDERED CHANGES TO CONTRACT DOCUMENTS. IT IS THE CONTRACTOR'S RESPONSIBILITY TO ENSURE ITEMS ARE CONSTRUCTED TO CONTRACT DOCUMENTS.

THE ADEQUACY OF ENGINEERING DESIGNS AND LAYOUT PERFORMED BY OTHERS RESTS WITH THE DESIGNING OR SUBMITTING AUTHORITY.

REVIEWING IS INTENDED ONLY AS AN AID TO THE CONTRACTOR IN OBTAINING CORRECT SHOP DRAWINGS. RESPONSIBILITY FOR CORRECTNESS SHALL REST WITH THE CONTRACTOR.

DEFERRED SUBMITTALS:

SHOP DRAWING SUBMITTALS REQUIRED BY THESE GENERAL STRUCTURAL NOTES WHICH CONTAIN DESIGN CALCULATIONS SEALED BY A REGISTERED ENGINEER OTHER THAN THE ENGINEER OF RECORD, SHALL BE SUBMITTED DURING CONSTRUCTION TO THE CITY FIELD INSPECTOR FOR REVIEW. THE DOCUMENTS WILL FIRST BE REVIEWED BY THE ENGINEER OF RECORD AND DETERMINED TO BE IN GENERAL CONFORMANCE WITH THE BUILDING DESIGN. THESE DEFERRED SUBMITTAL ITEMS SHALL NOT BE INSTALLED UNTIL THEIR DESIGN AND SUBMITTAL DOCUMENTS HAVE BEEN APPROVED BY THE BUILDING OFFICIAL. THE FOLLOWING ITEMS SHALL BE SUBMITTED PER THIS SECTION:

PREFABRICATED WOOD TRUSSES

GENERAL NOTES:

THE STRUCTURAL CONSTRUCTION DOCUMENTS REPRESENT THE FINISHED STRUCTURE. EXCEPT WHERE NOTED, THEY DO NOT INDICATE THE METHOD OF CONSTRUCTION. THE CONTRACTOR SHALL PROVIDE ALL MEASURES NECESSARY TO PROTECT THE STRUCTURE DURING CONSTRUCTION. SUCH MEASURES SHALL INCLUDE, BUT NOT BE LIMITED TO, BRACING, SHORING FOR LOADS DUE TO CONSTRUCTION EQUIPMENT, ETC. THE STRUCTURAL ENGINEER OF RECORD SHALL NOT BE RESPONSIBLE FOR THE CONTRACTOR'S MEANS, METHODS, TECHNIQUES, SEQUENCES FOR PROCEDURE OF CONSTRUCTION, OR THE SAFETY PRECAUTIONS AND THE PROGRAMS INCIDENT THERETO (NOR SHALL OBSERVATION VISITS TO THE SITE INCLUDE INSPECTION OF THESE ITEMS).

WHERE REFERENCE IS MADE TO VARIOUS TEST STANDARDS FOR MATERIALS, SUCH STANDARDS SHALL BE THE LATEST EDITION AND/OR ADDENDA. ANY ENGINEERING DESIGN, PROVIDED BY OTHERS AND SUBMITTED FOR REVIEW, SHALL BEAR THE SEAL OF A REGISTERED ENGINEER RECOGNIZED BY THE BUILDING CODE JURISDICTION OF THIS PROJECT.

NOTES AND DETAILS ON DRAWINGS SHALL TAKE PRECEDENCE OVER GENERAL STRUCTURAL NOTES AND TYPICAL DETAILS. WHERE NO DETAILS ARE SHOWN, CONSTRUCTION SHALL CONFORM TO SIMILAR WORK ON THE PROJECT, AND/OR AS PROVIDED FOR IN THE CONTRACT DOCUMENTS. WHERE DISCREPANCIES OCCUR BETWEEN PLANS, DETAILS, GENERAL STRUCTURAL NOTES AND SPECIFICATIONS, THE GREATER REQUIREMENTS SHALL GOVERN.
CONTRACTOR SHALL BE RESPONSIBLE FOR VERIFICATION OF ALL DIMENSIONS WITH ARCHITECTURAL DRAWINGS PRIOR TO START OF CONSTRUCTION. RESOLVE ANY DISCREPANCY WITH THE ARCHITECT. ESTABLISH AND VERIFY ALL OPENINGS AND INSERTS FOR ARCHITECTURAL, CIVIL, MECHANICAL, PLUMBING AND ELECTRICAL ITEMS WITH THE APPROPRIATE TRADE DRAWINGS AND SUBCONTRACTORS PRIOR TO CONSTRUCTION.

TYPICAL DETAILS MAY NOT NECESSARILY BE CUT ON PLANS, BUT APPLY UNLESS NOTED OTHERWISE.

CONSTRUCTION MATERIALS SHALL BE SPREAD OUT IF PLACED ON FRAMED CONSTRUCTION. LOAD SHALL NOT EXCEED THE DESIGN LIVE LOAD PER SQUARE FOOT.

OPTIONS ARE FOR CONTRACTOR'S CONVENIENCE. IF AN OPTION IS CHOSEN, CONTRACTOR SHALL BE RESPONSIBLE FOR ALL NECESSARY CHANGES, APPROVALS AND THE COORDINATION OF THE WORK WITH ALL RELATED TRADES AND SUPPLIERS.

SPECIAL INSPECTION-STRUCTURAL ONLY:

FOR SPECIAL STRUCTURAL INSPECTIONS:
CONTACT MODERN STRUCTURAL DESIGN, PLLC, AT 602-412-3109 PRIOR TO CONSTRUCTION:

SPECIAL INSPECTIONS SHALL BE PERFORMED UNDER THE DIRECT SUPERVISION OF A STATE REGISTERED STRUCTURAL ENGINEER WHO IS FAMILIAR WITH THE STRUCTURAL DESIGN OF THIS PROJECT. THE SUPERVISING STRUCTURAL ENGINEER SHALL SEAL THE SPECIAL INSPECTION CERTIFICATE.

SPECIAL INSPECTION IS TO BE PROVIDED FOR THE ITEMS LISTED BELOW IN ADDITION TO THE INSPECTIONS CONDUCTED BY THE BUILDING JURISDICTION. "SPECIAL STRUCTURAL INSPECTION" SHALL NOT RELIEVE THE OWNER OR THEIR AGENT FROM REQUESTING THE BUILDING JURISDICTION INSPECTIONS REQUIRED BY SECTION 109 OF THE INTERNATIONAL BUILDING CODE. SPECIAL INSPECTION IS REQUIRED PER CHAPTER 17 FOR THE FOLLOWING:

CONCRETE CONSTRUCTION:

1. CONCRETE:
A. DURING THE TAKING OF TEST SPECIMENS.
B. CONTINUOUS INSPECTION DURING THE PLACEMENT OF ALL REINFORCED CONCRETE, UNLESS NOTED OTHERWISE.
C. CONTINUOUS INSPECTION OF BOLTS TO BE INSTALLED IN CONCRETE PRIOR TO AND DURING THE PLACEMENT OF CONCRETE AROUND BOLTS.
(EXCEPTION: NO INSPECTION IS REQUIRED FOR PLACEMENT OF CONCRETE AROUND FOUNDATION ANCHOR BOLTS.)
D. NO INSPECTION IS REQUIRED FOR PLACEMENT OF SLAB ON GRADE CONCRETE. INSPECTION OF SLAB ON GRADE REINFORCING IS REQUIRED PER "REINFORCING STEEL" SECTION BELOW.
E. NO INSPECTION IS REQUIRED FOR THE PLACEMENT OF FOUNDATION CONCRETE (FOR BUILDINGS THREE STORIES OR LESS WHEN DESIGNED WITH 2,500PSI). INSPECTION OF FOUNDATION REINFORCING IS REQUIRED PER "REINFORCING STEEL" SECTION BELOW.

2. REINFORCING STEEL: INSPECTION OF IN-PLACE REINFORCING FOR CONFORMANCE PRIOR TO THE CLOSING OF FORMS OR THE DELIVERY OF CONCRETE TO THE JOBSITE FOR THE FOLLOWING:
A. REINFORCING FOR ALL CONCRETE REQUIRED TO HAVE INSPECTION NOTED ABOVE.
B. REINFORCING FOR CONCRETE FOUNDATIONS.
C. REINFORCING FOR SLABS ON GRADE.
D. REINFORCING FOR ALL MASONRY REQUIRED TO HAVE INSPECTION NOTED BELOW.

MASONRY CONSTRUCTION:

1. STRUCTURAL MASONRY:
A. DURING PREPARATION OF PRISMS.
B. INSPECTION OF IN-PLACE REINFORCING FOR CONFORMANCE PRIOR TO THE DELIVERY OF GROUT TO THE JOBSITE.
C. CONTINUOUS INSPECTION DURING PLACEMENT OF GROUT.
D. CLEANOUTS PRIOR TO CLOSING.

STEEL CONSTRUCTION:

1. WELDING:
A. VERIFICATION OF VALID WELDER'S CERTIFICATES.
B. PERIODIC VISUAL INSPECTION OF ALL FIELD WELDS.
C. ALL STRUCTURAL STEEL FABRICATORS SHALL EMPLOY AN AWS CERTIFIED INDEPENDENT TESTING LAB TO PROVIDE SHOP WELD INSPECTIONS PER CODE. INSPECTION REPORTS SHALL BE SUBMITTED TO ENGINEER OF RECORD PRIOR TO STEEL INSTALLATION. EXCEPTION: NO SHOP INSPECTION IS REQUIRED IF THE FABRICATOR IS ON THE CITY OF PHOENIX APPROVED STEEL FABRICATOR LIST.
D. CONTINUOUS INSPECTION OF ALL MULTIPASS FILLET WELDS OR SINGLE PASS FILLET WELDS LARGER THAN 5/16".
E. NON-DESTRUCTIVE TESTING OF ALL COMPLETE PENETRATION WELDS BY AN AWS CERTIFIED INDEPENDENT TESTING LABORATORY AT THE CONTRACTORS EXPENSE.
2. STEEL FRAMES: VERIFICATION OF BRACING, STIFFENING, MEMBER LOCATIONS, AND PROPER JOINT DETAIL APPLICATION AT ALL STEEL FRAME CONNECTIONS.
3. HIGH STRENGTH BOLTING:
A. VERIFICATION OF SNUG TIGHT BOLT INSTALLATION FOR ASTM A325N BOLTS.
B. VERIFICATION OF PROPER BOLT INSTALLATION AND PRETENSIONING FOR ASTM A325SC BOLTS.
C. OBSERVATION OF PREINSTALLATION TESTING AND PRETENSIONING CALIBRATION PROCEDURES FOR ASTM A325SC BOLTS.

SPECIAL CASES:

1. EXPANSION, EPOXY, ADHESIVE, AND SCREW ANCHORS: DURING THE PLACEMENT OF ALL ANCHORS SHOWN ON STRUCTURAL DRAWINGS. ADDITIONAL INSPECTIONS REQUIRED FOR REPAIR DETAILS SHALL BE PERFORMED AT THE CONTRACTOR'S EXPENSE.
A. INSPECTION OF HOLE DIAMETER, HOLE DEPTH AND DRILL BIT CONFORMANCE.
B. INSPECTION OF HOLE CLEANING WITH WIRE BRUSH AND COMPRESSED AIR.
C. INSPECTION OF ANCHOR INSTALLATION USING SPECIFIED PRODUCT AND MANUFACTURER'S RECOMMENDED INSTALLATION PROCEDURES.
D. INSPECTION OF EXPANSION ANCHORS SHALL INCLUDE THE VERIFICATION OF THE TIGHTENING TORQUE THAT IS SPECIFIED BY THE ANCHOR MANUFACTURER.

WOOD CONSTRUCTION:

1. HIGH-LOAD WOOD DIAPHRAGMS:
A. VERIFICATION OF STRUCTURAL PANEL GRADE AND THICKNESS.
B. VERIFICATION OF NOMINAL FRAMING MEMBER SIZE AT PANEL EDGES.
C. VERIFICATION OF NAIL OR STAPLE SIZE AND LENGTH, FASTENER SPACING, NUMBER OF FASTENER LINES, AND PROPER EDGE MARGINS.

SPECIAL INSPECTION - NON STRUCTURAL:

1. SOILS (BY OTHERS) - SPECIAL GRADING, EXCAVATION, FILLING, AND IN-PLACE DENSITY INSPECTIONS TO BE PERFORMED BY THE GEOTECHNICAL ENGINEER OF RECORD.
2. SPRAYED FIRE-RESISTANT MATERIALS (BY OTHERS) - PERIODIC INSPECTION OF ALL SPRAY APPLIED FIRE-RESISTANT MATERIALS TO BE PERFORMED BY AN INDEPENDENT TESTING LABORATORY.
3. ADHERED VENEER (BY OTHERS) - SPECIAL INSPECTIONS SHALL BE PROVIDED FOR THE INSTALLATION OF ALL EXTERIOR ADHERED VENEER LOCATED MORE THAN 8 FEET ABOVE ANY ADJACENT GRADE, ROOF, WALKWAY OR SIMILAR SURFACE BY ARCHITECT OF RECORD.

DUTIES AND RESPONSIBILITIES OF THE SPECIAL INSPECTOR:

A. THE SPECIAL INSPECTOR SHALL OBSERVE THE WORK ASSIGNED TO BE CERTAIN IT CONFORMS TO THE APPROVED DESIGN DRAWINGS AND SPECIFICATION.
B. THE SPECIAL INSPECTOR IS NOT AUTHORIZED TO APPROVE DEVIATIONS FROM THE DESIGN DRAWINGS OR SPECIFICATIONS, AND ALL DEVIATIONS MUST BE APPROVED BY THE STRUCTURAL ENGINEER OF RECORD PRIOR TO PROCEEDING WITH THE WORK. ALL REQUESTS FOR DEVIATIONS SHALL BE INITIATED BY THE CONTRACTOR VIA WRITTEN REQUEST FOR INFORMATION (RFI).
C. THE SPECIAL INSPECTOR SHALL FURNISH INSPECTION REPORTS TO THE BUILDING OFFICIAL, AND TO THE ENGINEER OR ARCHITECT OF RECORD. ALL DISCREPANCIES SHALL BE BROUGHT TO THE IMMEDIATE ATTENTION OF THE CONTRACTOR FOR CORRECTION, THEN, IF UNCORRECTED, TO THE DESIGN AUTHORITY AND THE BUILDING OFFICIAL.
D. CONTRACTOR SHALL PROVIDE THE SPECIAL INSPECTOR ACCESS TO ALL ITEMS REQUIRING SPECIAL INSPECTION. ACCESS SHALL BE PROVIDED BY IN-PLACE LADDERS, SCAFFOLDS, LIFTS AND/OR OTHER EQUIPMENT OPERATED BY THE CONTRACTOR'S PERSONNEL AS REQUIRED FOR SAFE OBSERVATION. INSPECTOR IS NOT RESPONSIBLE OR AUTHORIZED TO OPERATE CONTRACTOR'S EQUIPMENT.
E. UPON COMPLETION OF THE ASSIGNED WORK THE ENGINEER OR ARCHITECT SHALL COMPLETE AND SIGN THE APPROPRIATE FORMS CERTIFYING THAT TO THE BEST OF THEIR KNOWLEDGE THE WORK IS IN CONFORMANCE WITH THE APPROVED PLANS AND SPECIFICATIONS, AND THE APPLICABLE WORKMANSHIP PROVISIONS OF THE CODE.

STRUCTURAL OBSERVATION (IBC):

STRUCTURAL OBSERVATION IS TO BE PROVIDED PER SECTION 1709 OF THE INTERNATIONAL BUILDING CODE IN ADDITION TO THE ITEMS LISTED UNDER "SPECIAL INSPECTION: STRUCTURAL".

GENERAL:

STRUCTURAL OBSERVATION INCLUDES, BUT IS NOT LIMITED TO, THE VISUAL OBSERVATION OF THE STRUCTURAL SYSTEM, FOR GENERAL CONFORMANCE TO THE APPROVED PLANS AND SPECIFICATIONS, AT SIGNIFICANT CONSTRUCTION STAGES AND AT COMPLETION OF THE STRUCTURAL SYSTEM, AND SUBMISSION OF APPROPRIATE OBSERVATION REPORTS TO THE BUILDING OFFICIAL.

THE OWNER SHALL EMPLOY A REGISTERED STRUCTURAL DESIGN PROFESSIONAL TO PERFORM THE STRUCTURAL OBSERVATION. OBSERVED DEFICIENCIES SHALL BE REPORTED IN WRITING TO THE OWNER'S REPRESENTATIVE, SPECIAL INSPECTOR, CONTRACTOR AND THE BUILDING OFFICIAL. THE STRUCTURAL OBSERVER SHALL SUBMIT TO THE BUILDING OFFICIAL A WRITTEN STATEMENT THAT THE SITE VISITS HAVE BEEN MADE AND IDENTIFYING ANY REPORTED DEFICIENCIES WHICH, TO THE BEST OF THE STRUCTURAL OBSERVER'S KNOWLEDGE, HAVE NOT BEEN RESOLVED.

CITY OF PHOENIX
Planning and Development Department
BY: Alfredo Tadaya
05/17/2023
This set of plans has been reviewed for **Structural** requirements prior to issuance of Building Permit and shall be kept at the construction site. Such review shall not prevent the Building Official from requiring correction of errors in the plans where such errors are subsequently found to be in violation of any law or ordinance.

APPROVED AS NOTED

THIS DRAWING HAS BEEN DRAWN UNDER THE GUIDANCE OF MSD PLLC AND HAS BEEN REVIEWED FOR COMPLIANCE WITH THE STRUCTURAL CALCULATIONS AND CORRECTNESS ONLY. THE SCOPE OF MSD PLLC DOES NOT EXCEED THAT OF THE ACCOMPANYING CALCULATIONS.

52235
SCOTT E. SEEMAN
DATE SIGNED 04/11/23

THE INFORMATION CONTAINED ON THESE DRAWINGS SUCH AS DATA, DESIGNS, AND CONCEPTS, ARE PROPERTY OF PROCADESIGN LLC. AND SHALL NOT BE USED FOR ANY OTHER PURPOSE OTHER THAN ORIGINALLY INTENDED WITHOUT WRITTEN PERMISSION OF THE DESIGNER/CONSULTANT.

#	REVISIONS	DATE
1	CITY COMMENTS	12/12/2022
2	CITY COMMENTS	4/5/2023

DANCO RESIDENCE
4441 N JOKAKE DR SCOTTSDALE AZ 85251
172-29-017

DRAWN BY:
ProCa Design

CONTACT #
www.procadesign.net
(602) 606-2885
angelica@procadesign.com

DATE:
OCT, 2020

SCALE:
PER PLAN

SHEET:
GSN

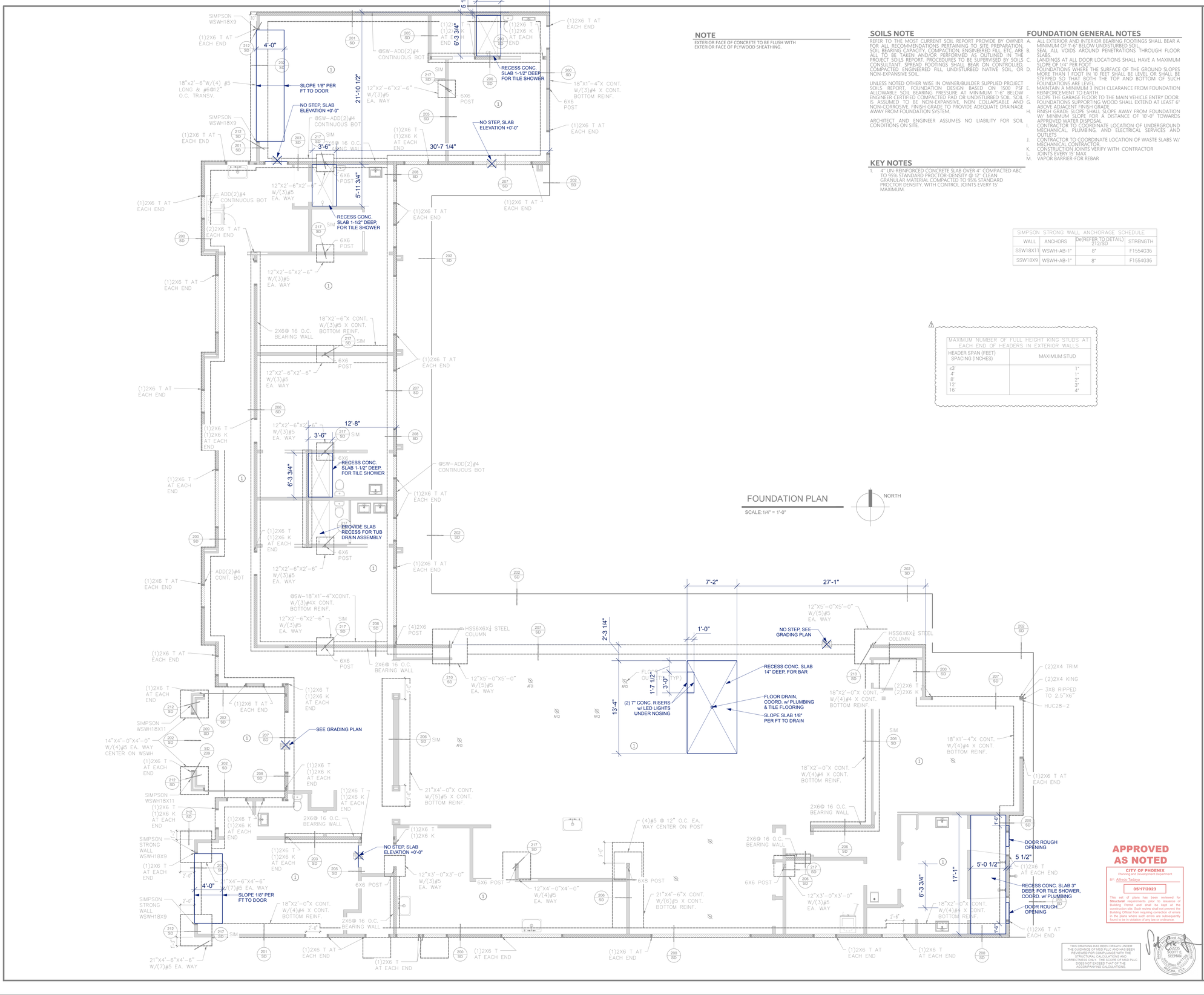

FOUNDATION PLAN

SCALE:1/4" = 1'-0"

NORTH

NOTE

EXTERIOR FACE OF CONCRETE TO BE FLUSH WITH EXTERIOR FACE OF PLYWOOD SHEATHING.

SOILS NOTE

REFER TO THE MOST CURRENT SOIL REPORT PROVIDE BY OWNER FOR ALL RECOMMENDATIONS PERTAINING TO SITE PREPARATION, SOIL BEARING CAPACITY, COMPACTION, ENGINEERED FILL, ETC. ARE ALL TO BE TAKEN AND/OR PERFORMED AS OUTLINED IN THE PROJECT SOILS REPORT. PROCEDURES TO BE SUPERVISED BY SOILS CONSULTANT. SPREAD FOOTINGS SHALL BEAR ON CONTROLLED, COMPACTED ENGINEERED FILL, UNDISTURBED NATIVE SOIL, OR NON-EXPANSIVE SOIL.

UNLESS NOTED OTHER WISE IN OWNER/BUILDER SUPPLIED PROJECT SOILS REPORT, FOUNDATION DESIGN BASED ON 1500 PSF E. ALLOWABLE SOIL BEARING PRESSURE AT MINIMUM 1'-6" BELOW ENGINEER CERTIFIED COMPACTED PAD OR UNDISTURBED SOIL. SOIL IS ASSUMED TO BE NON-EXPANSIVE, NON COLLAPSABLE AND NON-CORROSIVE. FINISH GRADE TO PROVIDE ADEQUATE DRAINAGE AWAY FROM FOUNDATION SYSTEM.

ARCHITECT AND ENGINEER ASSUMES NO LIABILITY FOR SOIL CONDITIONS ON SITE.

KEY NOTES

1. 4" UN-REINFORCED CONCRETE SLAB OVER 4" COMPACTED ABC TO 95% STANDARD PROCTOR-DENSITY @ 12" CLEAN GRANULAR MATERIAL COMPACTED TO 95% STANDARD PROCTOR DENSITY. WITH CONTROL JOINTS EVERY 15' MAXIMUM.

FOUNDATION GENERAL NOTES

A. ALL EXTERIOR AND INTERIOR BEARING FOOTINGS SHALL BEAR A MINIMUM OF 1'-6" BELOW UNDISTURBED SOIL.
B. SEAL ALL VOIDS AROUND PENETRATIONS THROUGH FLOOR SLABS.
C. LANDINGS AT ALL DOOR LOCATIONS SHALL HAVE A MAXIMUM SLOPE OF 1/4" PER FOOT
D. FOUNDATIONS WHERE THE SURFACE OF THE GROUND SLOPES MORE THAN 1 FOOT IN 10 FEET SHALL BE LEVEL OR SHALL BE STEPPED SO THAT BOTH THE TOP AND BOTTOM OF SUCH FOUNDATIONS ARE LEVEL.
E. MAINTAIN A MINIMUM 3 INCH CLEARANCE FROM FOUNDATION REINFORCEMENT TO EARTH.
F. SLOPE THE GARAGE FLOOR TO THE MAIN VEHICLE ENTRY DOOR.
G. FOUNDATIONS SUPPORTING WOOD SHALL EXTEND AT LEAST 6" ABOVE ADJACENT FINISH GRADE.
H. FINISH GRADE SLOPE SHALL SLOPE AWAY FROM FOUNDATION W/ MINIMUM SLOPE FOR A DISTANCE OF 10'-0" TOWARDS APPROVED WATER DISPOSAL
I. CONTRACTOR TO COORDINATE LOCATION OF UNDERGROUND MECHANICAL, PLUMBING, AND ELECTRICAL SERVICES AND OUTLETS
J. CONTRACTOR TO COORDINATE LOCATION OF WASTE SLABS W/ MECHANICAL CONTRACTOR
K. CONSTRUCTION JOINTS VERIFY WITH CONTRACTOR
L. JOINTS EVERY 15' MAX.
M. VAPOR BARRIER-FOR REBAR

SIMPSON STRONG WALL ANCHORAGE SCHEDULE			
WALL	ANCHORS	De(REFER TO DETAIL) 212/SD	STRENGTH
SSW18X11	WSWH-AB-1"	8"	F1554G36
SSW18X9	WSWH-AB-1"	8"	F1554G36

MAXIMUM NUMBER OF FULL HEIGHT KING STUDS AT EACH END OF HEADERS IN EXTERIOR WALLS	
HEADER SPAN (FEET) SPACING (INCHES)	MAXIMUM STUD
≤3'	1"
4'	1"
8'	2"
12'	3"
16'	4"

THE INFORMATION CONTAINED ON THESE DRAWINGS SUCH AS DATA, DESIGNS, AND CONCEPTS, ARE PROPERTY OF PROCADESIGN LLC. ORIGINALLY INTENDED FOR ONE PROJECT ONLY AND FOR THE ORIGINAL OWNER. THEY MAY NOT BE REPRODUCED OR USED FOR OTHER PROJECTS WITHOUT WRITTEN PERMISSION OF THE DESIGNER/CONSULTANT.

#	REVISIONS	DATE
1	CITY COMMENTS	12/12/2022
2	CITY COMMENTS	4/5/2023

DANCO RESIDENCE

4441 N JOKAKE DR SCOTTSDALE AZ 85251

172-29-017

APPROVED AS NOTED

CITY OF PHOENIX
Planning and Development Department
BY: Alfredo Tadeya
05/17/2023

This set of plans has been reviewed for **Structural** requirements prior to issuance of Building Permit and shall be kept at the construction site. Such review shall not prevent the Building Official from requiring correction of errors in the plans where such errors are subsequently found to be in violation of any law or ordinance.

THIS DRAWING HAS BEEN DRAWN UNDER THE GUIDANCE OF MSD PLLC AND HAS BEEN CHECKED FOR DIMENSIONAL, NOT STRUCTURAL CALCULATIONS AND CORRECTNESS ONLY. THE SCOPE OF MSD PLLC DOES NOT EXCEED THAT OF THE ACCOMPANYING CALCULATIONS.

SCOTT E. SEEMAN
CERTIFICATE NO. 36-17051
REGISTERED ARCHITECT
STATE OF ARIZONA, U.S.A.

DRAWN BY: PROCA DESIGN
CONTACT #
www.procadesign.net
(602) 606-2885
angelica@procadesign.com

DATE: OCT. 2020

SCALE: PER PLAN

SHEET: S1

1 SLAB PLAN MARK-UP
Scale: 3/16" = 1'-0"

MARK-UP
2023-07-22

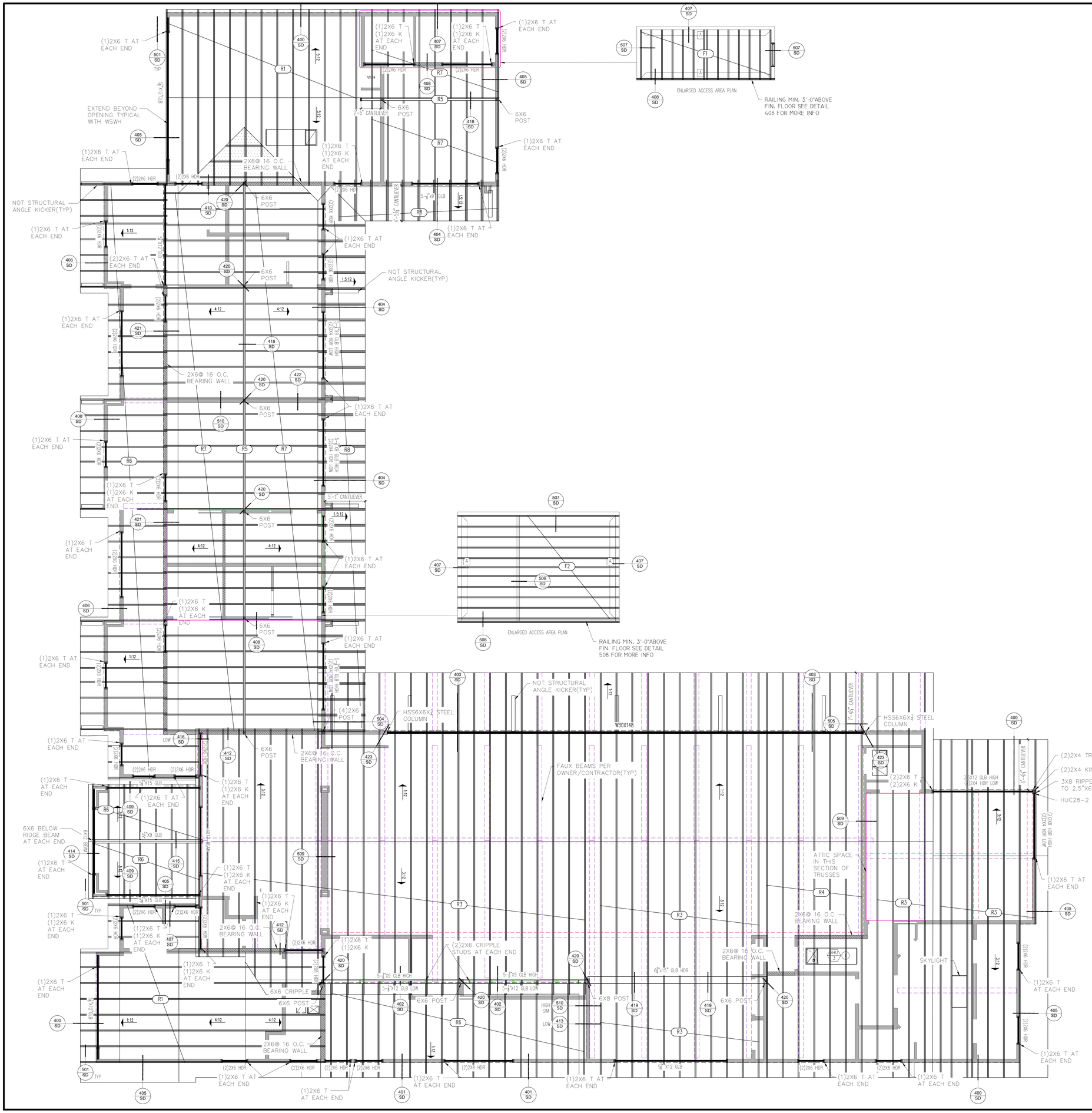

ROOF TRUSS LOADS

TRUSS MANUFACTURED TO DESIGN FOR:
DL: 16 PSF
LL: 20 PSF

HANGER SCHEDULE (SIMPSON PRODUCT)

(NOT ALL USED)

A	LUS 26	B	HUS26	C	LUS46
D	HHUS26-2	E	THA29	F	THA426

LEGEND

ATTIC ACCESS — 22"x30" ATTIC ACCESS-PROVIDE 30" HEADROOM AT ALL ACCESS LOCATIONS. A.H.U. LOCATED IN ATTIC SPACE(VERIFY LOCATION). INSULATE AND WEATHER STRIP PER IRC SECTION N1102.2.4.

OVER FRAME FRAMING

DISCLAIMER

- THE SCHEMATIC ROOF FRAMING LAYOUT SHOWN HEREON IS ONLY FOR A CONCEPTUAL LAYOUT.
- TRUSS MANUFACTURE SHOULD FIELD VERIFY ALL DIMENSIONS.
- TRUSS MANUFACTURE IS TO ONLY USE THIS CONCEPTUAL PLAN FOR HIS/HER PROFESSIONAL STRUCTURAL ROOF DESIGN.
- TRUSS MANUFACTURE TO PROVIDE SHOP DRAWINGS THAT INDICATE SIZE, LOCATION, AND BRACING OF ALL MEMBERS TO THE CONTRACTOR/OWNER FOR APPROVAL PRIOR TO TRUSS MANUFACTURES FABRICATION OF ROOF SYSTEM.
- R301.4 DEAD LOAD. THE ACTUAL WEIGHTS OF MATERIALS AND CONSTRUCTION SHALL BE USED FOR DETERMINING DEAD LOAD WITH CONSIDERATION FOR THE DEAD LOAD OF FIXED SERVICE EQUIPMENT (HVAC).

NOTES

A. DOUBLE TOP PLATE REQUIRED AT ALL EXTERIOR WALLS
B. ROOF SHEATHING TO BE $\frac{15}{32}$" MINIMUM RATED PLYWOOD NAILED 6" ON CENTER.
C. MANUFACTURED TRUSSES 24" ON CENTER.

FRAMING GENERAL NOTES

1. MINIMUM I KING STUD AND ONE TRIMMER REQUIRED AT ALL OPENINGS. PROVIDE CONTINUOUS BEARING TO FOUNDATION FOR 2 TRIMMERS OR GREATER. POSS SUPPORTING FLUSH BEAM OR G.T. SHALL EXTEND TO UNDERSIDE OF BOTTOMMOST TOP PLATE OF WALL. DOUBLE TOP PLATE SHALL RUN CONTINUOUS OVER POST AT FLUSH BEAM OR G.T. UNLESS POST CAP IS SPECIFIED OR UNO ON PLAN.
2. DOUBLE 2x TOP PLATE REQUIRED AT ALL BEARING WALLS.
3. ROOF AND FLOOR FRAMING MEMBERS SHOWN ON PLANS INDICATE PREFABRICATED WOOD TRUSSES SPACED @ 24" O.C. MAX. UNO
4. ALIGN (2) STUDS (MIN.) BENEATH ALL GIRDER TRUSSES AT BEARING WALL. NAIL STUDS TOGETHER PER TYPICAL NAILING SCHEDULE. HIP GIRDERS W/ UP TO 8'-0 SETBACK AND UP TO 20'-0 SPAN MAY HAVE (1) STUD, UNO. PROVIDE CONTINUOUS BEARING TO FOUNDATION FOR ALL BEAMS AND GIRDER TRUSSES SUPPORTED BY (2) 2x OR LARGER POSTS.
5. FASTENERS SHALL BE PLACED NOT LESS THAN $\frac{3}{8}$" FROM PANELEDGES ANS SHALL BE FIRMLY DRIVEN INTO FRAMING MEMBERS. PANEL JOINT SHALL BE CENTERED ON FRAMING MEMBER. NO UNBLOCKED PANELS LESS THAN 24" WIDE SHALL BE USED. PROVIDE $\frac{1}{8}$" GAP BETWEEN ROOF SHEATHING PANELS.

ROOF TYPE

- R1 — 2 POINT BEARING COMMON TRUSS AT 24" O.C.
- R2 — 3 POINT BEARING COMMON ROOF TRUSS AT 24" O.C.
- R3 — 2 POINT BEARING VAULTED ROOF TRUSS AT 24" O.C.
- R4 — 3 POINT BEARING VAULTED ROOF TRUSS AT 24" O.C.
- R5 — 2 POINT BEARING 5 1/8"X10 1/2" GLULAM BEAM RIDGE BEAM
- R6 — 2 POINT BEARING 2X8 RAFTERS SPACED AT 24" O.C.
- R7 — 2 POINT BEARING 2X10 RAFTERS SPACED AT 24" O.C.
- R8 — L3-1/2X3-1/2X1/4 STEEL OUTRIGGERS SPACED TO MATCH ADJACENT RAFTERS (REFERENCE DETAIL 404/SD)
- F1 — 2X8 FLOOR JOIST SPACED AT 16" O.C.
- F2 — 2X8 FLOOR JOIST SPACED AT 12" O.C.

FIREBLOCKING PER SECTION R302.11:

A. IN CONCEALED SPACES OF STUD WALLS AND PARTITIONS, INCLUDING FURRED SPACES, AT THE CEILING AND FLOOR LEVELS. CONCEALED HORIZONTAL FURRED SPACES SHALL ALSO BE FIREBLOCKED AT INTERVALS NOT EXCEEDING 10 FEET.
B. AT ALL INTERCONNECTIONS BETWEEN CONCEALED VERTICAL AND HORIZONTAL SPACES SUCH AS OCCUR AT SOFFITS, DROP CEILINGS AND COVE CEILINGS.
C. IN CONCEALED SPACES BETWEEN STAIR STRINGERS AT THE TOP AND BOTTOM OF THE RUN;
D. IN OPENINGS AROUND VENTS, PIPES AND DUCTS.

APPROVED AS NOTED
CITY OF PHOENIX
Planning and Development Department
BY: Alfredo Tadeya
05/17/2023
This set of plans has been reviewed for **Structural** requirements prior to issuance of Building Permit and shall be kept at the construction site. Such review shall not prevent the Building Official from requiring correction of errors in the plans where such errors are subsequently found to be in violation of any law or ordinance.

THIS DRAWING HAS BEEN DRAWN UNDER THE GUIDANCE OF MSD PLLC AND HAS BEEN REVIEWED FOR COMPLIANCE WITH THE STRUCTURAL CALCULATIONS AND CORRECTNESS ONLY. THE SCOPE OF MSD PLLC DOES NOT EXCEED THAT OF THE ACCOMPANYING CALCULATIONS.

CERTIFICATE OF AUTHORITY
32231
SCOTT E. SEEMAN
REGISTERED
ARIZONA, U.S.A.

FRAMING PLAN

SCALE: 1/4" = 1'-0"

NORTH

PROCA DESIGN LLC

THE INFORMATION CONTAINED ON THESE DRAWINGS SUCH AS DATA, DESIGNS, AND CONCEPTS, ARE PROPERTY OF PROCADESIGN LLC. AND SHALL NOT BE USED FOR ANY OTHER PURPOSE OTHER THAN ORIGINALLY INTENDED WITHOUT WRITTEN PERMISSION OF THE DESIGNER/CONSULTANT.

#	REVISIONS	DATE
1	CITY COMMENTS	12/12/2022
2	CITY COMMENTS	4/5/2023

DANCO RESIDENCE

4441 N JOKAKE DR SCOTTSDALE AZ 85251

172-29-017

DRAWN BY:
PROCA DESIGN
CONTACT #
www.procadesign.net
(602) 606-2885
angelica@procadesign.com

DATE:
OCT. 2020

SCALE:
PER PLAN

SHEET:
S2

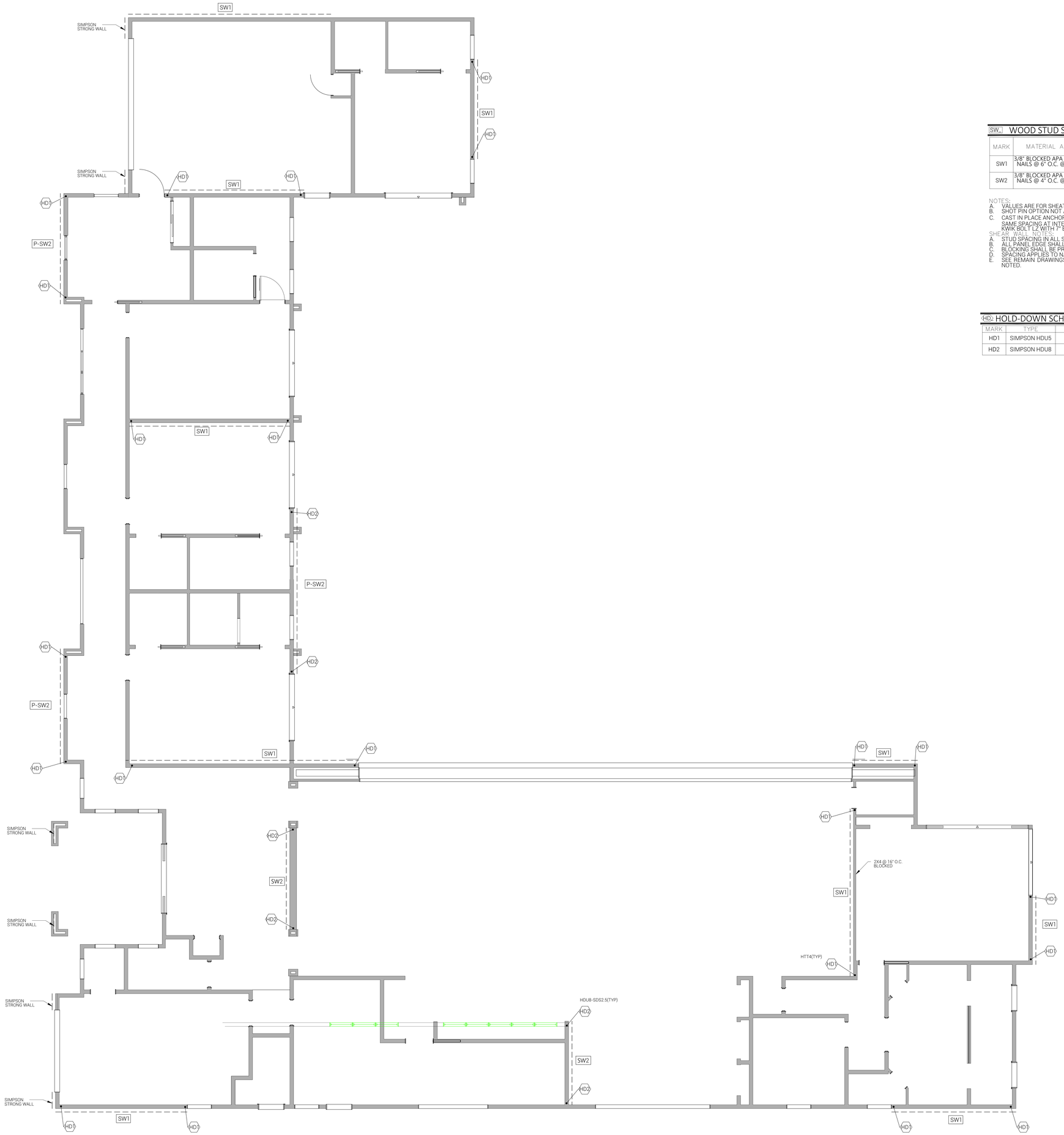

SW WOOD STUD SHEAR WALL SCHEDULE (NOT ALL USED)

MARK	MATERIAL AND ATTACHMENT	SILL PLATE ATTACHMENT @ FOUNDATIONS (3)	ALLOW SHEAR PLF(1)
SW1	3/8" BLOCKED APA "CDX" SHEATHING W/ 8d NAILS @ 6" O.C. @ EDGES AND 12" O.C. @ FIELD	5/8"DIA. ANCHOR BOLTS @ 32" O.C. W/ 7" MIN. EMBED	392 PLF
SW2	3/8" BLOCKED APA "CDX" SHEATHING W/ 8d NAILS @ 4" O.C. @ EDGES AND 12" O.C. @ FIELD	5/8"DIA. ANCHOR BOLTS @ 24" O.C. W/ 8" MIN. EMBED	602 PLF

NOTES:
A. VALUES ARE FOR SHEATHING ON ONE SIDE OF DOUGLAS-FIR FRAMED WALLS.
B. SHOT PIN OPTION NOT ALLOWABLE @ SHEAR WALLS.
C. CAST IN PLACE ANCHOR BOLTS MAY BE REPLACED WITH $\frac{1}{2}$" DIA. EXPANSION BOLTS AT SAME SPACING AT INTERIOR WALLS ONLY. EXPANSION BOLTS SHALL BE $\frac{1}{2}$" DIA. HILTI KWIK BOLT LZ WITH 7" EMBED PER ICC ESR 1917

SHEAR WALL NOTES:
A. STUD SPACING IN ALL SHEAR WALLS NOT EXCEED 16" O.C.
B. ALL PANEL EDGE SHALL BE BACKED WITH MINIMUM 2" NOMINAL FRAMING.
C. BLOCKING SHALL BE PROVIDED NEAR MID-HGT. OF WALL AT SHEATHING JOINT.
D. SPACING APPLIES TO NAILING AT ALL STUDS, TOP AND BOTTOM PLATES AND BLOCKING.
E. SEE REMAIN DRAWINGS FOR ADDITIONAL (FINISHED SURFACE) WALL COVERINGS NOT NOTED.

HD HOLD-DOWN SCHEDULE (NOT ALL USED)

MARK	TYPE	CONNECTION TO STUD	CONNECTION @ BASE
HD1	SIMPSON HDU5	(14)$\frac{1}{4}$"X2 $\frac{1}{2}$" SDS TO (2) 2X MEMBER	5/8" DIA. ANCHOR BOLT (15" MIN. EMBEDMENT)
HD2	SIMPSON HDU8	(20)$\frac{1}{4}$ "X2 $\frac{1}{2}$ " TO (3)2X MEMBER	7/8" DIA. ANCHOR BOLT (18" MIN. EMBEDMENT)

APPROVED AS NOTED
CITY OF PHOENIX
Planning and Development Department
BY: Alfredo Tadaya
05/17/2023
This set of plans has been reviewed for **Structural** requirements prior to issuance of Building Permit and shall be kept at the construction site. Such review shall not prevent the Building Official from requiring correction of errors in the plans where such errors are subsequently found to be in violation of any law or ordinance.

THIS DRAWING HAS BEEN DRAWN UNDER THE GUIDANCE OF MSD PLLC AND HAS BEEN REVIEWED FOR COMPLIANCE WITH THE STRUCTURAL CALCULATIONS AND CORRECTNESS ONLY. THE SCOPE OF MSD PLLC DOES NOT EXCEED THAT OF THE ACCOMPANYING CALCULATONS.

Registered Professional Engineer (Civil) CERTIFICATE NO. 32235 SCOTT E. SEEMAN Date Signed 5/12/23 ARIZONA, U.S.A.

SHEAR/BRACE PLAN
SCALE: 1/4" = 1'-0"

NORTH

ProCA DESIGN LLC

THE INFORMATION CONTAINED ON THESE DRAWINGS SUCH AS DATA, DESIGNS, AND CONCEPTS, ARE PROPERTY OF PROCADESIGN LLC. AND SHALL NOT BE USED FOR ANY OTHER PURPOSE OTHER THAN ORIGINALLY INTENDED WITHOUT WRITTEN PERMISSION OF THE DESIGNER/CONSULTANT.

#	REVISIONS	DATE
1	CITY COMMENTS	12/12/2022
2	CITY COMMENTS	4/5/2023

DANCO RESIDENCE
4441 N JOKAKE DR SCOTTSDALE AZ 85251
172-29-017

DRAWN BY:
ProCA Design
CONTACT #
www.procadesign.net
(602) 606-2885
angelica@procadesign.com

DATE:
OCT. 2020

SCALE:
PER PLAN

SHEET:
S3

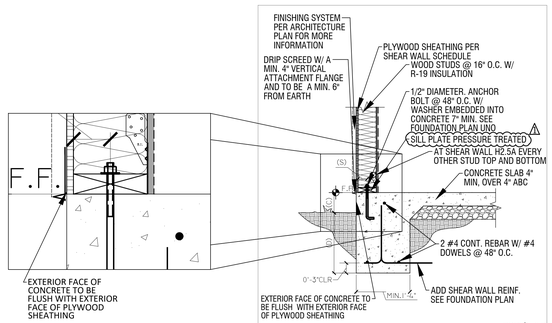

NOTE: WALL SIZE SEE FLOOR PLAN

WALL WIDTH	EDGE DISTANCE (S)	CLEARANCE (C)	DEPTH (D)
2X4	2"	MIN. 6"	MIN. 18"
2X6	2½"	MIN. 6"	MIN. 18"

200 MONOLITHIC FOUNDATION

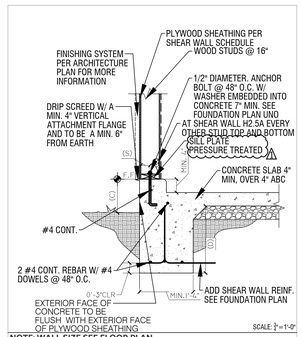

NOTE: WALL SIZE SEE FLOOR PLAN

WALL WIDTH	EDGE DISTANCE (S)	CLEARANCE (C)	DEPTH (D)
2X4	2"	MIN. 6"	MIN. 18"
2X6	2½"	MIN. 6"	MIN. 18"

201 MONOLITHIC FOUNDATION TURNDOWN GARAGE

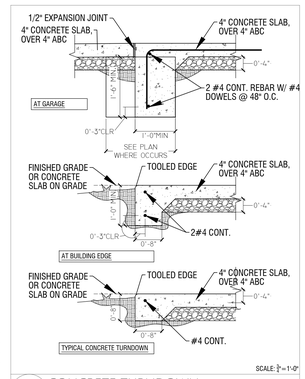

202 CONCRETE TURNDOWN

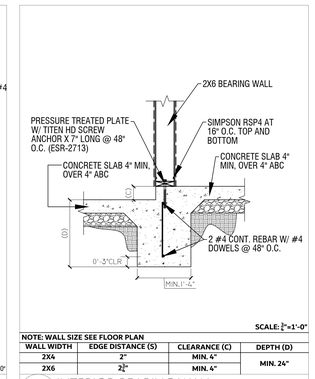

NOTE: WALL SIZE SEE FLOOR PLAN

WALL WIDTH	EDGE DISTANCE (S)	CLEARANCE (C)	DEPTH (D)
2X4	2"	MIN. 4"	MIN. 24"
2X6	2½"	MIN. 4"	

203 INTERIOR BEARING WALL

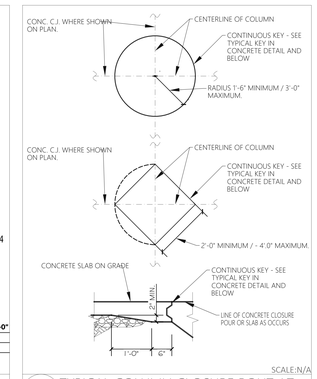

204 TYPICAL COLUMN CLOSURE POUT AT CONCRETE SLAB ON GRADE

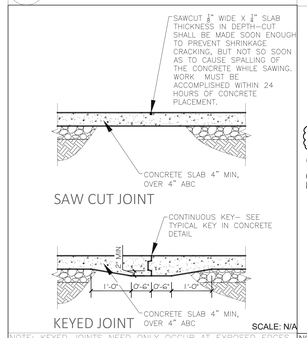

NOTE: KEYED JOINTS NEED ONLY OCCUR AT EXPOSED EDGES DURING PLACEMENT UNLESS SPECIFICALLY NOTED ON THE PLANS. "TOOL WET JOINT" "ZIP STRIP" ETC. SHALL MATCH SAWCUT REQUIREMENTS.

TYP TYP, CONTROL JOINTS IN CONCRETE SLAB-ON-GRADE

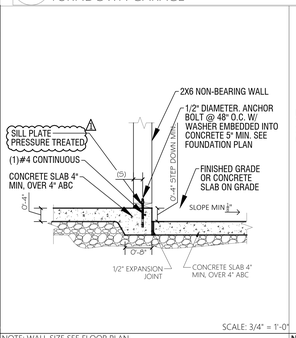

NOTE: WALL SIZE SEE FLOOR PLAN

WALL WIDTH	EDGE DISTANCE (S)			
2X4	2"			
2X6	2½"			

205 NON BEARING WALL TURNDOWN GARAGE

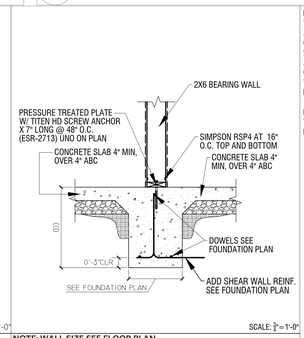

NOTE: WALL SIZE SEE FLOOR PLAN

WALL WIDTH	EDGE DISTANCE (S)		DEPTH (D)
2X4	2"		MIN. 24"
2X6	2½"		

206 INTERIOR BEARING WALL

P2503.6 SHOWER LINER TEST.
WHERE SHOWER FLOORS AND RECEPTORS ARE MADE WATER TIGHT BY THE APPLICATION OF MATERIALS REQUIRED BY SECTION P2709.2, THE COMPLETED LINER INSTALLATION SHALL BE TESTED. THE PIPE FROM THE SHOWER DRAIN SHALL BE PLUGGED WATER TIGHT FOR THE TEST. THE FLOOR AND RECEPTOR AREA SHALL BE FILLED WITH POTABLE WATER TO A DEPTH OF NOT LESS THAN 2 INCHES (51 MM) MEASURED AT THE THRESHOLD. WHERE A THRESHOLD OF NOT LESS THAN 2 INCHES (51 MM) IN HEIGHT DOES NOT EXIST, A TEMPORARY THRESHOLD SHALL BE CONSTRUCTED TO RETAIN THE TEST WATER IN THE LINED FLOOR OR RECEPTOR AREA TO A LEVEL NOT LESS THAN 2 INCHES (51 MM) IN DEPTH MEASURED AT THE THRESHOLD. THE WATER SHALL BE RETAINED FOR A TEST PERIOD OF NOT LESS THAN 15 MINUTES AND THERE SHALL NOT BE EVIDENCE OF LEAKAGE.

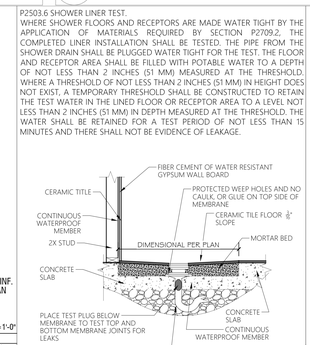

TYP SHOWER PAD

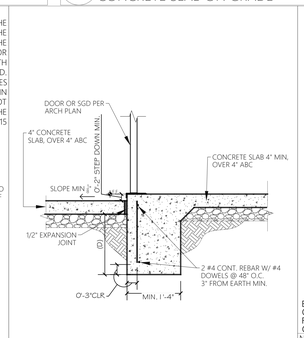

207 EXTERIOR MONOLITHIC CONCRETE TURNDOWN/ SLAB

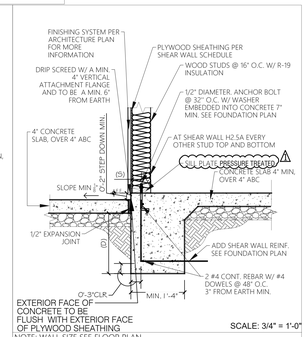

NOTE: WALL SIZE SEE FLOOR PLAN

WALL WIDTH	EDGE DISTANCE (S)	CLEARANCE (C)	DEPTH (D)
2X4	2"	MIN. 6"	MIN. 18"
2X6	2½"	MIN. 6"	MIN. 18"

208 EXTERIOR MONOLITHIC CONCRETE TURNDOWN/ SLAB

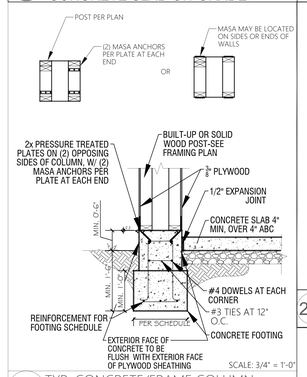

209 TYP. CONCRETE/FRAME COLUMN

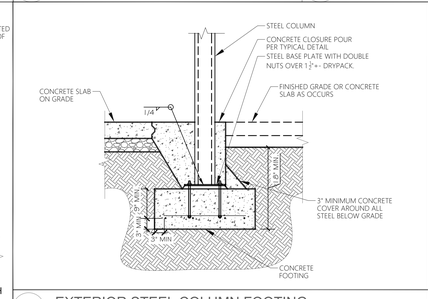

210 EXTERIOR STEEL COLUMN FOOTING N.T.S.

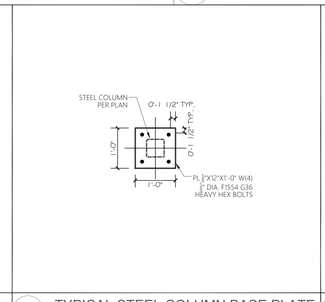

211 TYPICAL STEEL COLUMN BASE PLATE N.T.S.

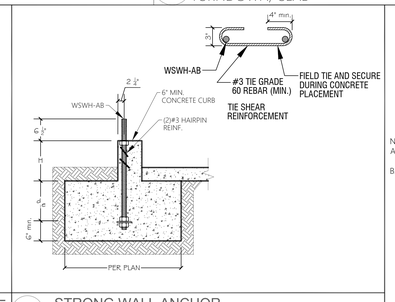

212 STRONG WALL ANCHOR N.T.S.

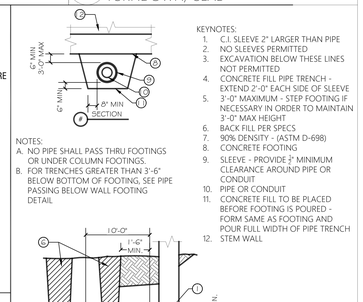

213 PIPE THROUGH FOOTING AND TRENCH N.T.S.

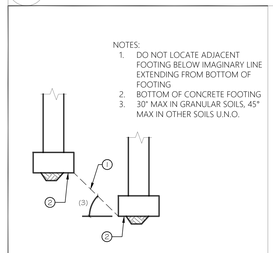

214 MAXIMUM SLOPE BETWEEN ADJACENT FOOTING N.T.S.

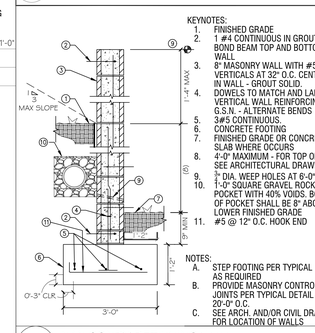

215 4' MASONRY RETAINING WALL

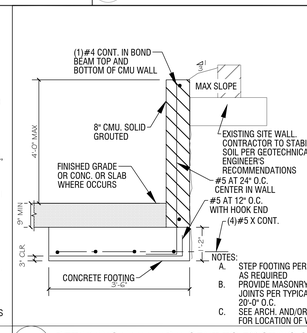

216 RETAINING WALL ADJACENT TO EXISTING SITE WALL

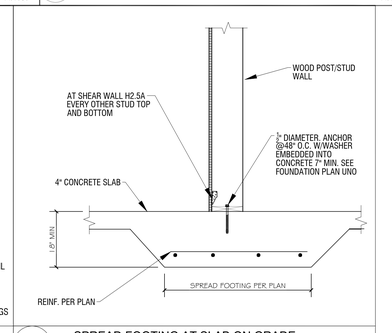

217 SPREAD FOOTING AT SLAB ON GRADE

APPROVED AS NOTED

CITY OF PHOENIX
Planning and Development Department
BY: Alfredo Tadaya
05/17/2023
This set of plans has been reviewed for **Structural** requirements prior to issuance of Building Permit and shall be kept at the construction site. Such review shall not prevent the Building Official from requiring correction of errors in the plans where such errors are subsequently found to be in violation of any law or ordinance.

THIS DRAWING HAS BEEN DRAWN UNDER THE GUIDANCE OF MSD PLLC AND HAS BEEN REVIEWED FOR COMPLIANCE WITH THE STRUCTURAL CALCULATIONS AND CORRECTNESS ONLY. THE SCOPE OF MSD PLLC DOES NOT EXCEED THAT OF THE ACCOMPANYING CALCULATIONS.

REGISTERED PROFESSIONAL ENGINEER (CIVIL) CERTIFICATE NO. 32235 SCOTT C. SEEMAN DATE SIGNED 04/17/23 ARIZONA, U.S.A.

PROCA DESIGN LLC

THE INFORMATION CONTAINED ON THESE DRAWINGS SUCH AS DATA, DESIGNS, AND CONCEPTS, ARE PROPERTY OF PROCADESIGN LLC. AND SHALL NOT BE USED FOR ANY OTHER PURPOSE OTHER THAN ORIGINALLY INTENDED WITHOUT WRITTEN PERMISSION OF THE DESIGNER/CONSULTANT.

#	REVISIONS	DATE
1	CITY COMMENTS	12/12/2022
2	CITY COMMENTS	4/5/2023

DANCO RESIDENCE
4441 N JOKAKE DR SCOTTSDALE AZ 85251
172-29-017

DRAWN BY: PROCA DESIGN
CONTACT #
www.procadesign.net
(602) 606-2885
angelica@procadesign.com

DATE: OCT. 2020
SCALE: PER PLAN
SHEET: SD

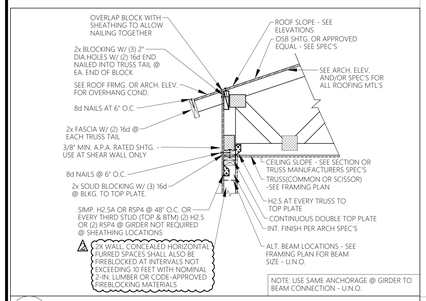

400 STUBBED TRUSS @ WALL (@ BEAM SIM.)
SCALE: 3/4" = 1'-0"

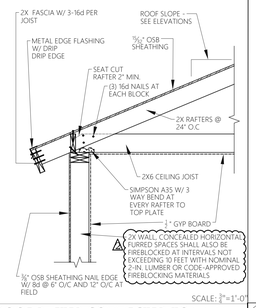

401 ROOF RAFTER CONNECTED TO WALL

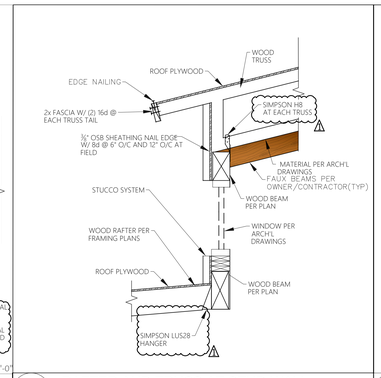

402 RAFTER AND TRUSS AT STUD WALL
N.T.S.

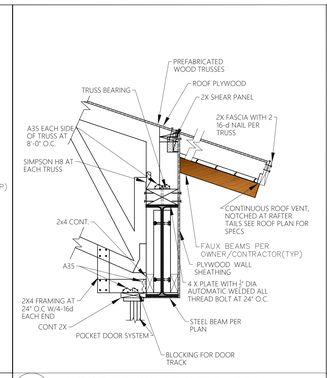

403 WOOD TRUSS AT STEEL BEAM
SCALE: 3/4" = 1'-0"

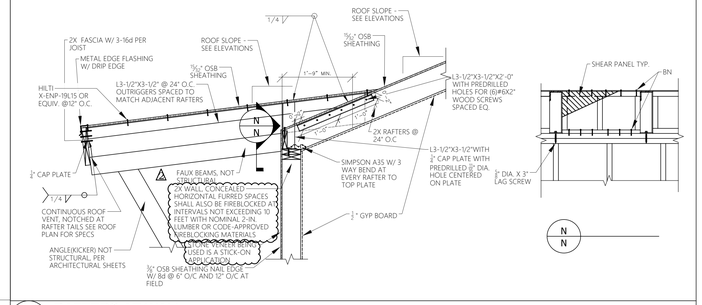

404 RAFTERS AT WALL

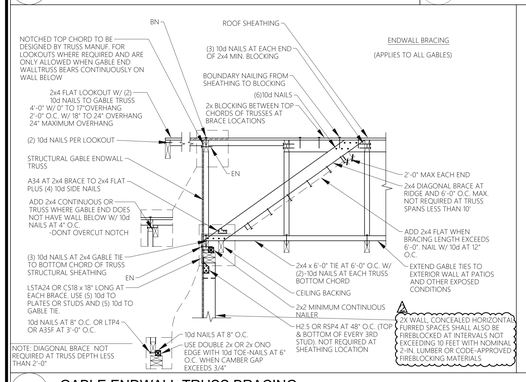

405 GABLE ENDWALL TRUSS BRACING
SCALE: 3/4" = 1'-0"

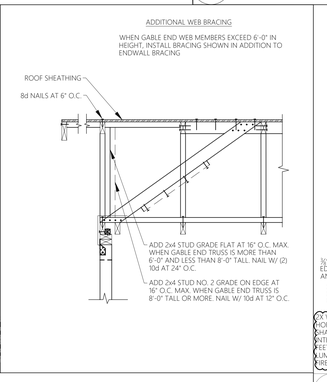

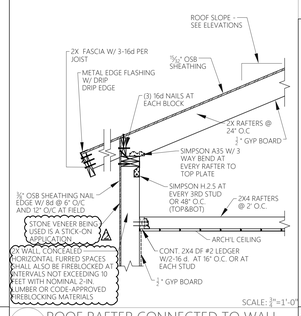

406 ROOF RAFTER CONNECTED TO WALL

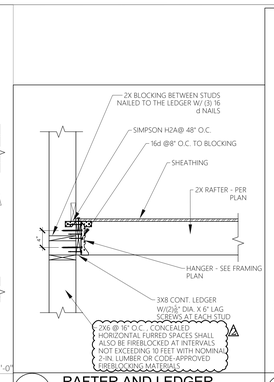

407 RAFTER AND LEDGER TO WOOD WALL
SCALE: 3/4" = 1'-0"

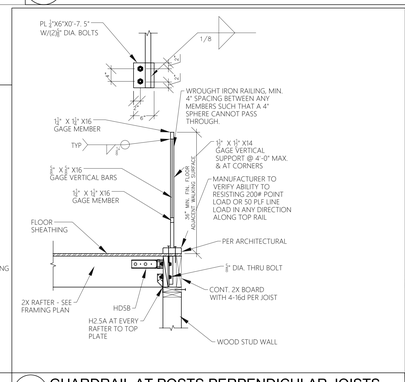

408 GUARDRAIL AT POSTS PERPENDICULAR JOISTS

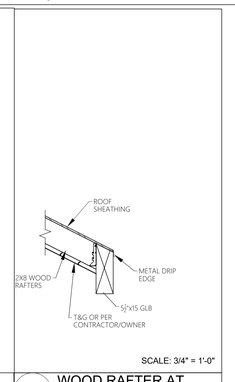

409 WOOD RAFTER AT WOOD BEAM

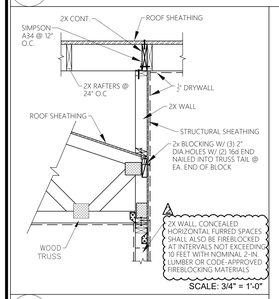

410 STUBBED TRUSS @ WALL (@ BEAM SIM.)

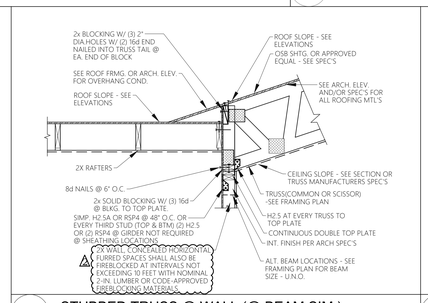

412 STUBBED TRUSS @ WALL (@ BEAM SIM.)

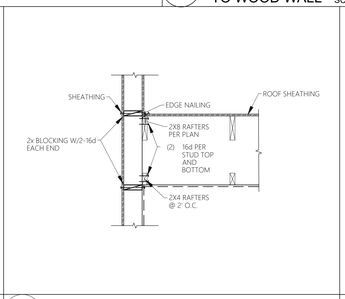

413 WOOD RAFTERS AT WOOD STUD WALL
SCALE: 3/4" = 1'-0"

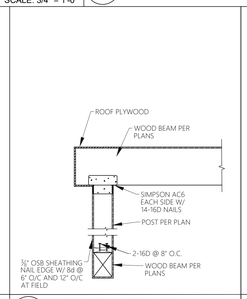

414 RIDGE SUPPORT

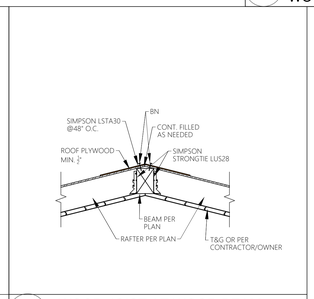

415 WOOD JOIST AT WOOD BEAM
SCALE: 3/4" = 1'-0"

In combustible construction, fire-blocking shall be provided to cut off both vertical and horizontal concealed draft openings and to form an effective fire barrier between stories, and between a top story and the roof space. Fireblocking shall be provided in wood-framed construction in concealed spaces of stud walls and partitions, including furred spaces and parallel rows of studs or staggered studs horizontally at intervals not exceeding 10 feet. Detail shall have to shown on the plans.

THIS DRAWING HAS BEEN DRAWN UNDER THE GUIDANCE OF MSD PLLC AND HAS BEEN REVIEWED FOR COMPLIANCE WITH THE STRUCTURAL CALCULATIONS AND CORRECTNESS ONLY. THE SCOPE OF MSD PLLC DOES NOT EXCEED THAT OF THE ACCOMPANYING CALCULATIONS.

REGISTERED PROFESSIONAL ENGINEER (CIVIL) CERTIFICATE NO. 32235 SCOTT E. SEEMAN DATE SIGNED 04/11/23 ARIZONA, U.S.A.

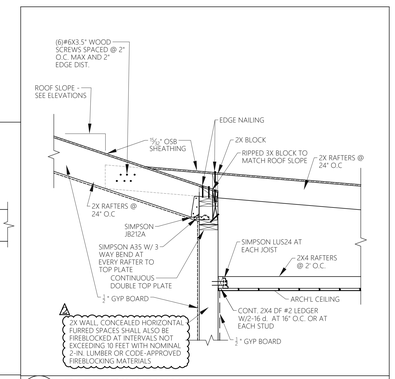

421 RAFTERS AT WALL

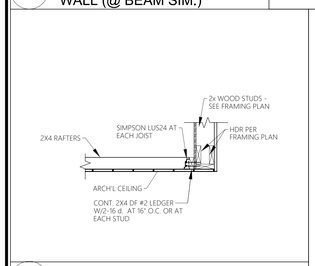

416 JOIST AT STUD WALL/HEADER
SCALE: 3/4" = 1'-0"

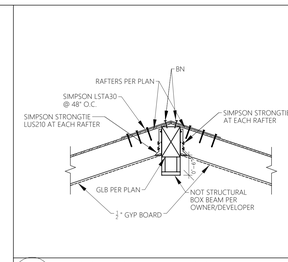

418 WOOD JOIST AT WOOD BEAM
SCALE: 3/4" = 1'-0"

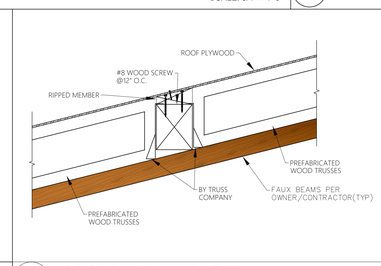

419 SCISSOR TRUSSES AT BEAM
SCALE: 3/4" = 1'-0"

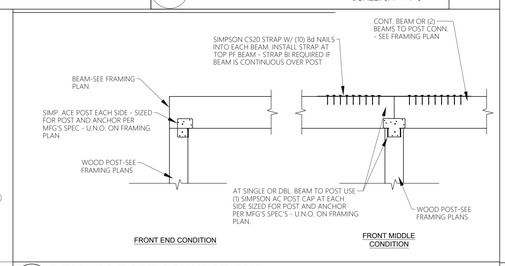

420 BEAM TO POST CONNECTIONS

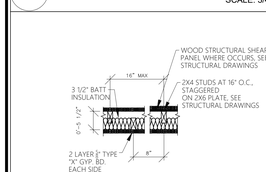

422 NOISE CONTROL STAGGERED STUD WALL
SCALE: 3/4" = 1'-0"

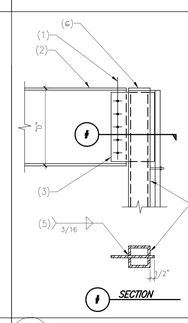

NOTES:
1. FOR SIZE, TYPE AND NUMBER OF BOLTS, SEE TYPICAL BOLT SCHEDULE.
2. STEEL BEAM.
3. 3/8" STEEL THRU PLATE – 5/8" STEEL THRU PLATE WHERE "D" = 27" OR GREATER.
4. STEEL COLUMN.
5. WELD BOTH SIDES – TYPICAL.
6. 1/2" CAP PLATE WELD ALL AROUND

SCALE: N.T.S.

423 STEEL BEAM TO STEEL COLUMN CONNECTION

NOMINAL BEAM DEPTH "D"	NUMBER OF 3/4" DIA. ASTM, A325 BOLTS
UP TO 7"	2
8" - 11"	2
12" - 14"	3
15" - 17"	4
18" - 20"	5
21" - 23"	6
24" - 29"	7
30" - 32"	8
33" - 35"	9
36"	10

FRAMING NOTES:
1. THE TYPICAL STEEL BEAM TO STEEL COLUMN OR STEEL BEAM TO STEEL BEAM CONNECTION CONSISTS OF 3/4" SINGLE SHEAR PLATES WITH 3/4" DIA. ASTM A325 BOLTS. USE 3/4" SHEAR PLATES WHERE "D" = 27" OR GREATER.
2. ALL BOLTS SHALL BE INSTALLED USING SHORT SLOTTED HOLES IN EITHER THE BEAM WEB OR THE SHEAR PLATE PER LATEST AISC SPECIFICATIONS.
3. CONNECTIONS REQUIRING DOUBLE ANGLES OR BENT PLATES WILL BE MARKED ON THE PLANS WITH AN ASTERISK (*). ALL DOUBLE ANGLES SHALL BE L4X4X[AND ALL BENT PLATES SHALL BE 3/4" THICK -DETAIL PER THE LATEST AISC STEEL CONSTRUCTION MANUAL

424 STEEL BEAM TO STEEL COLUMN CONNECTION
SCALE: N.T.S.

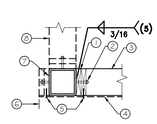

NOTES:
1. (2) 2X PLATES CONT.
2. 3/4" DIA. THREADED STUDS AT 24" O.C. AND 4" MAX FROM TOP AND BOTTOM.
3. STUD WALL.
4. WALL SHEATHING WHERE OCCURS
5. EDGE NAILING.
6. WALL END WHERE OCCURS
7. TS COLUMN.
8. STUD WALL WHERE OCCURS.

425 TYP STUD WALL TO STEEL COLUMN CONNECTION
SCALE: N.T.S.

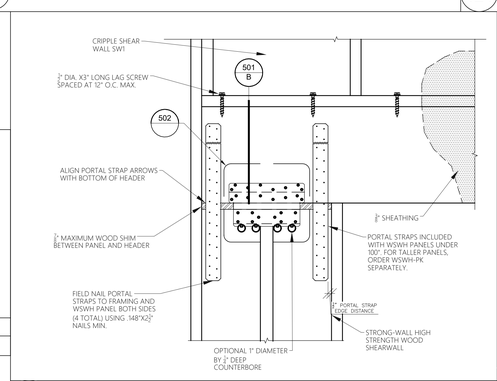

501 SIMPSON STRONG WALL TOP CONNECTION
N.T.S.

CITY OF PHOENIX
Planning and Development Department
BY: Alfredo Tadaya
05/17/2023
This set of plans has been reviewed for Structural requirements prior to issuance of Building Permit and shall be kept at the construction site. Such review shall not prevent the Building Official from requiring correction of errors in the plans where such errors are subsequently found to be in violation of any law or ordinance.

APPROVED AS NOTED

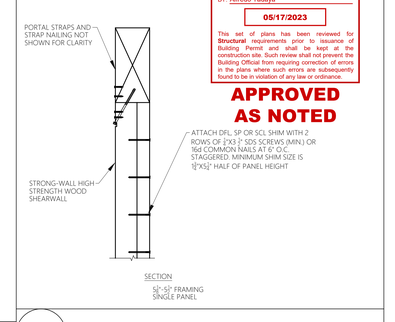

501.B SIMPSON STRONG WALL TOP CONNECTION
N.T.S.

THE INFORMATION CONTAINED ON THESE DRAWINGS SUCH AS DATA, DESIGNS, AND CONCEPTS, ARE PROPERTY OF PROCADESIGN LLC. AND SHALL NOT BE USED FOR ANY OTHER PURPOSE OTHER THAN ORIGINALLY INTENDED WITHOUT WRITTEN PERMISSION OF THE DESIGNER/CONSULTANT.

#	REVISIONS	DATE
1	CITY COMMENTS	12/12/2022
2	CITY COMMENTS	4/5/2023

DANCO RESIDENCE
4441 N JOKAKE DR SCOTTSDALE AZ 85251
172-29-017

DRAWN BY: PROCA DESIGN
CONTACT #
www.procadesign.net
(602) 606-2885
angelica@procadesign.com

DATE: OCT. 2020
SCALE: PER PLAN
SHEET: SD

WSWH-TP CONNECTION		
MODEL NO.	FASTENER QUANTITY	
	SWS16150	SDS25600
WSWH-TP12	14	2
WSWH-TP18	26	4
WSWH-TP24	46	8

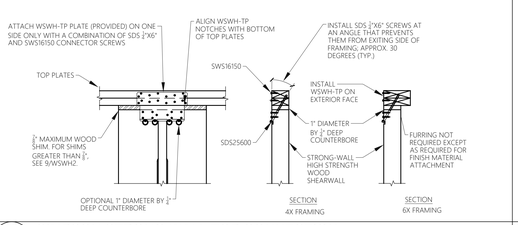

502 SIMPSON STRONG WALL TOP CONNECTION

N.T.S.

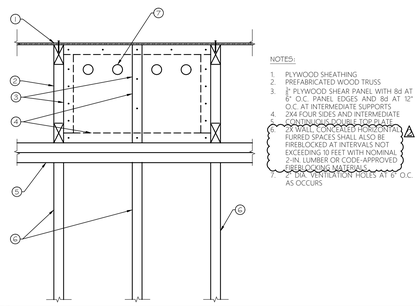

NOTES:

1. PLYWOOD SHEATHING
2. PREFABRICATED WOOD TRUSS
3. 3/8" PLYWOOD SHEAR PANEL WITH 8d AT 6" O.C. PANEL EDGES AND 8d AT 12" O.C. AT INTERMEDIATE SUPPORTS
4. 2X4 FOUR SIDES AND INTERMEDIATE CONTINUOUS DOUBLE FIREBLAKE
5. 2X WALL, CONCEALED HORIZONTAL FURRED SPACES SHALL ALSO BE FIREBLOCKED AT INTERVALS NOT EXCEEDING 10 FEET WITH NOMINAL 2-IN. LUMBER OR CODE-APPROVED FIREBLOCKING MATERIALS
6. 1/8" DIA. VENTILATION HOLES AT 6" O.C. AS OCCURS

503 SHEAR PANEL

N.T.S.

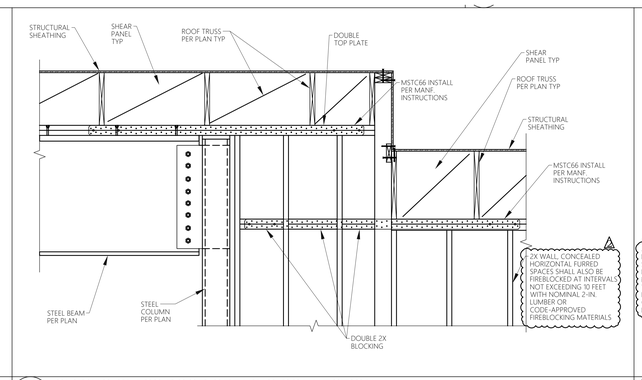

504 SLIDING GLASS DOOR OPENING CONNECTION

N.T.S.

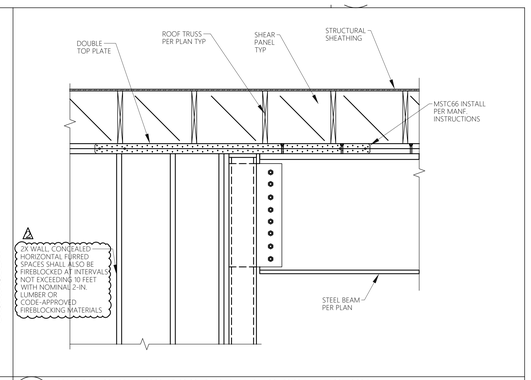

505 SLIDING GLASS DOOR OPENING CONNECTION

N.T.S.

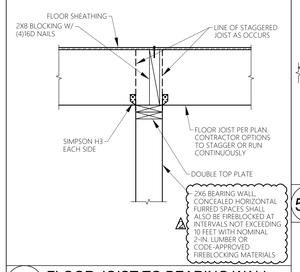

506 FLOOR JOIST TO BEARING WALL

N.T.S.

NOTES:

1. SIMPSON H3 AT EACH STUD
2. 2X6 LEDGER WITH (3) 16d NAILS PER STUD
3. DOUBLE 2x SOLID BLOCKING WITH (3) 16d PER BLOCK

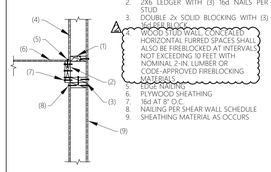

2X WOOD STUD WALL, CONCEALED HORIZONTAL FURRED SPACES SHALL ALSO BE FIREBLOCKED AT INTERVALS NOT EXCEEDING 10 FEET WITH NOMINAL 2-IN. LUMBER OR CODE-APPROVED FIREBLOCKING MATERIALS

4. EDGE NAILING
5. PLYWOOD SHEATHING
6. 16d AT 8" O.C.
7. NAILING PER SHEAR WALL SCHEDULE
8. SHEATHING MATERIAL AS OCCURS

507 LEDGER AT STUD WALL

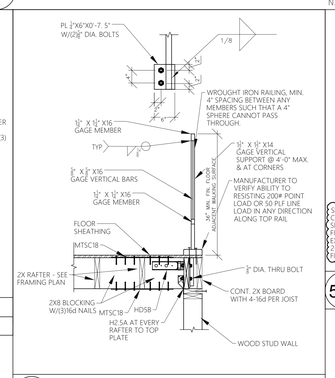

508 GUARDRAIL AT POSTS PARALLEL JOISTS

N.T.S.

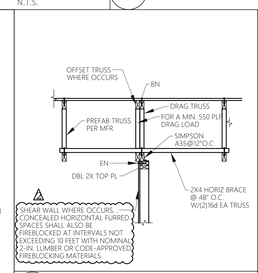

509 SHEAR TRANSFER AT TRUSS

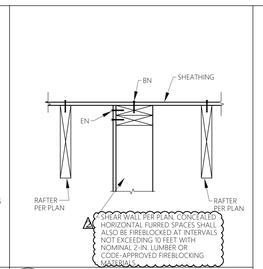

510 SHEAR TRANSFER ROOF

APPROVED AS NOTED

CITY OF PHOENIX
Planning and Development Department

BY: Alfredo Tadaya

05/17/2023

This set of plans has been reviewed for **Structural** requirements prior to issuance of Building Permit and shall be kept at the construction site. Such review shall not prevent the Building Official from requiring correction of errors in the plans where such errors are subsequently found to be in violation of any law or ordinance.

THIS DRAWING HAS BEEN DRAWN UNDER THE GUIDANCE OF MSD PLLC AND HAS BEEN REVIEWED FOR COMPLIANCE WITH THE STRUCTURAL CALCULATIONS AND CORRECTNESS ONLY. THE SCOPE OF MSD PLLC DOES NOT EXCEED THAT OF THE ACCOMPANYING CALCULATIONS.

Registered Professional Engineer CERTIFICATE NO. 22235 SCOTT E. SEEMAN Date Signed 04/21/23 ARIZONA, U.S.A.

PROCA DESIGN LLC

THE INFORMATION CONTAINED ON THESE DRAWINGS SUCH AS DATA, DESIGNS, AND CONCEPTS, ARE PROPERTY OF PROCADESIGN LLC. AND SHALL NOT BE USED FOR ANY OTHER PURPOSE OTHER THAN ORIGINALLY INTENDED WITHOUT WRITTEN PERMISSION OF THE DESIGNER/CONSULTANT.

#	REVISIONS	DATE
1	CITY COMMENTS	12/12/2022
2	CITY COMMENTS	4/5/2023

DANCO RESIDENCE

4441 N JOKAKE DR SCOTTSDALE AZ 85251

172-29-017

DRAWN BY:
PROCA DESIGN
CONTACT #
www.procadesign.net
(602) 606-2885
angelica@procadesign.com

DATE:
OCT. 2020

SCALE:
PER PLAN

SHEET:
SD

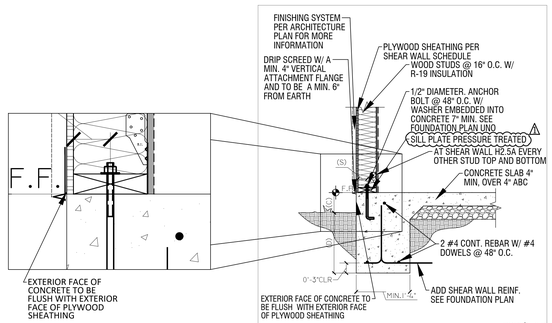

NOTE: WALL SIZE SEE FLOOR PLAN

WALL WIDTH	EDGE DISTANCE (S)	CLEARANCE (C)	DEPTH (D)
2X4	2"	MIN. 6"	MIN. 18"
2X6	2½"	MIN. 6"	MIN. 18"

200 MONOLITHIC FOUNDATION

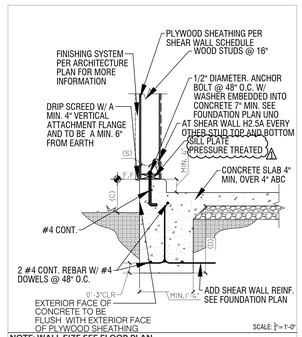

NOTE: WALL SIZE SEE FLOOR PLAN

WALL WIDTH	EDGE DISTANCE (S)	CLEARANCE (C)	DEPTH (D)
2X4	2"	MIN. 6"	MIN. 18"
2X6	2½"	MIN. 6"	MIN. 18"

201 MONOLITHIC FOUNDATION TURNDOWN GARAGE

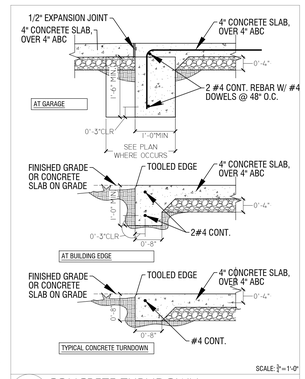

202 CONCRETE TURNDOWN

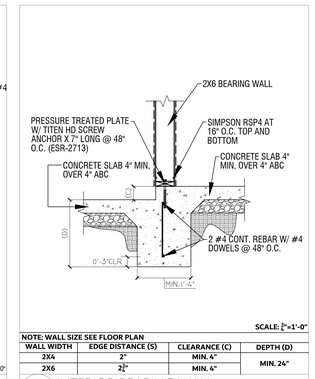

NOTE: WALL SIZE SEE FLOOR PLAN

WALL WIDTH	EDGE DISTANCE (S)	CLEARANCE (C)	DEPTH (D)
2X4	2"	MIN. 4"	MIN. 24"
2X6	2½"	MIN. 4"	

203 INTERIOR BEARING WALL

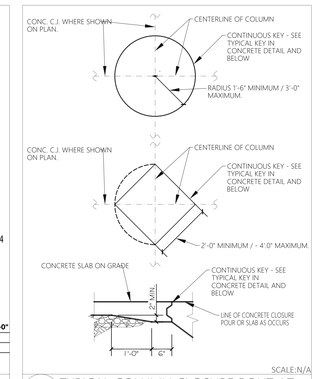

204 TYPICAL COLUMN CLOSURE POUT AT CONCRETE SLAB ON GRADE

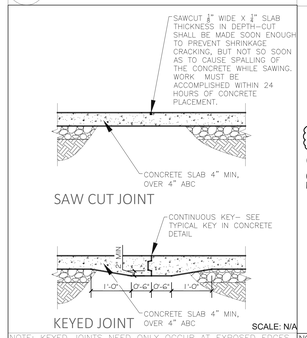

NOTE: KEYED JOINTS NEED ONLY OCCUR AT EXPOSED EDGES DURING PLACEMENT UNLESS SPECIFICALLY NOTED ON THE PLANS. "TOOL WET JOINT" "ZIP STRIP" ETC. SHALL MATCH SAWCUT REQUIREMENTS.

TYP TYP, CONTROL JOINTS IN CONCRETE SLAB-ON-GRADE

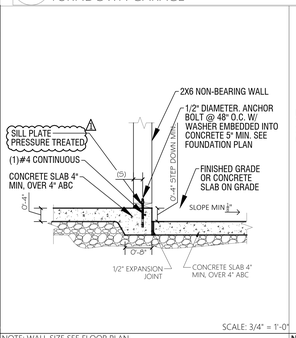

NOTE: WALL SIZE SEE FLOOR PLAN

WALL WIDTH	EDGE DISTANCE (S)			
2X4	2"			
2X6	2½"			

205 NON BEARING WALL TURNDOWN GARAGE

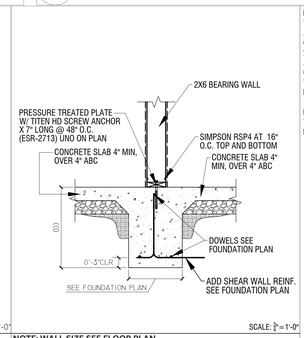

NOTE: WALL SIZE SEE FLOOR PLAN

WALL WIDTH	EDGE DISTANCE (S)		DEPTH (D)
2X4	2"		MIN. 24"
2X6	2½"		

206 INTERIOR BEARING WALL

P2503.6 SHOWER LINER TEST.
WHERE SHOWER FLOORS AND RECEPTORS ARE MADE WATER TIGHT BY THE APPLICATION OF MATERIALS REQUIRED BY SECTION P2709.2, THE COMPLETED LINER INSTALLATION SHALL BE TESTED. THE PIPE FROM THE SHOWER DRAIN SHALL BE PLUGGED WATER TIGHT FOR THE TEST. THE FLOOR AND RECEPTOR AREA SHALL BE FILLED WITH POTABLE WATER TO A DEPTH OF NOT LESS THAN 2 INCHES (51 MM) MEASURED AT THE THRESHOLD. WHERE A THRESHOLD OF NOT LESS THAN 2 INCHES (51 MM) IN HEIGHT DOES NOT EXIST, A TEMPORARY THRESHOLD SHALL BE CONSTRUCTED TO RETAIN THE TEST WATER IN THE LINED FLOOR OR RECEPTOR AREA TO A LEVEL NOT LESS THAN 2 INCHES (51 MM) IN DEPTH MEASURED AT THE THRESHOLD. THE WATER SHALL BE RETAINED FOR A TEST PERIOD OF NOT LESS THAN 15 MINUTES AND THERE SHALL NOT BE EVIDENCE OF LEAKAGE.

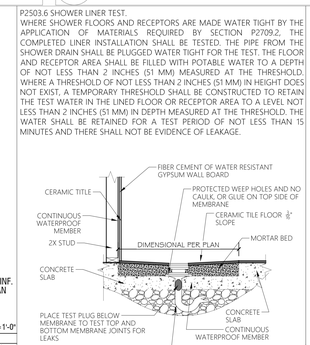

TYP SHOWER PAD

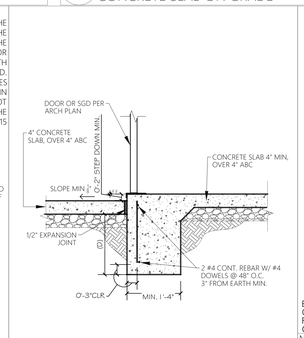

207 EXTERIOR MONOLITHIC CONCRETE TURNDOWN/ SLAB

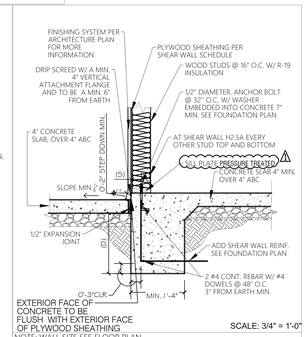

NOTE: WALL SIZE SEE FLOOR PLAN

WALL WIDTH	EDGE DISTANCE (S)	CLEARANCE (C)	DEPTH (D)
2X4	2"	MIN. 6"	MIN. 18"
2X6	2½"	MIN. 6"	MIN. 18"

208 EXTERIOR MONOLITHIC CONCRETE TURNDOWN/ SLAB

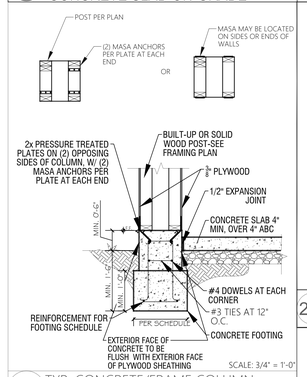

209 TYP. CONCRETE/FRAME COLUMN

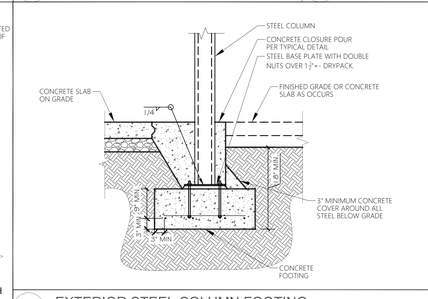

210 EXTERIOR STEEL COLUMN FOOTING N.T.S.

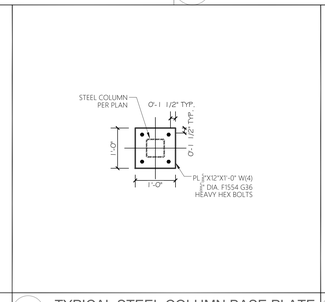

211 TYPICAL STEEL COLUMN BASE PLATE N.T.S.

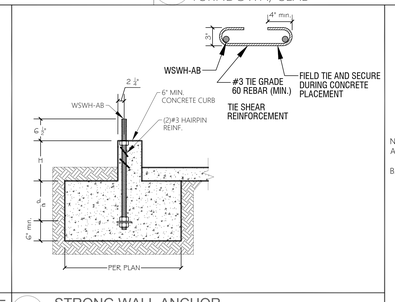

212 STRONG WALL ANCHOR N.T.S.

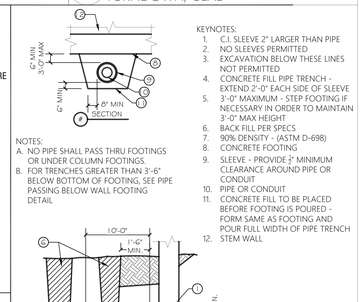

213 PIPE THROUGH FOOTING AND TRENCH N.T.S.

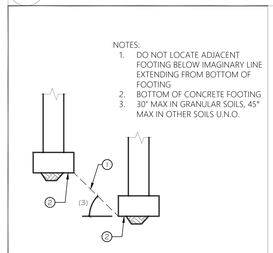

214 MAXIMUM SLOPE BETWEEN ADJACENT FOOTING N.T.S.

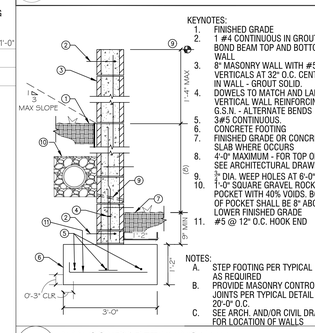

215 4' MASONRY RETAINING WALL

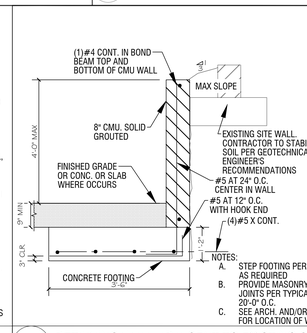

216 RETAINING WALL ADJACENT TO EXISTING SITE WALL

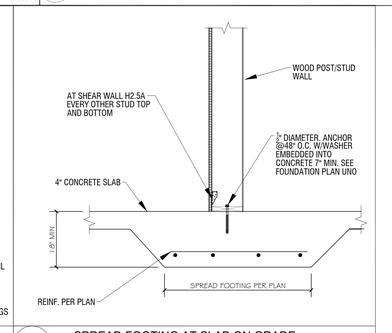

217 SPREAD FOOTING AT SLAB ON GRADE

APPROVED AS NOTED

CITY OF PHOENIX
Planning and Development Department
BY: Alfredo Tadaya
05/17/2023
This set of plans has been reviewed for **Structural** requirements prior to issuance of Building Permit and shall be kept at the construction site. Such review shall not prevent the Building Official from requiring correction of errors in the plans where such errors are subsequently found to be in violation of any law or ordinance.

THIS DRAWING HAS BEEN DRAWN UNDER THE GUIDANCE OF MSD PLLC AND HAS BEEN REVIEWED FOR COMPLIANCE WITH THE STRUCTURAL CALCULATIONS AND CORRECTNESS ONLY. THE SCOPE OF MSD PLLC DOES NOT EXCEED THAT OF THE ACCOMPANYING CALCULATIONS.

REGISTERED PROFESSIONAL ENGINEER (CIVIL) CERTIFICATE NO. 32235 SCOTT C. SEEMAN DATE SIGNED 04/17/23 ARIZONA, U.S.A.

PROCA DESIGN LLC

THE INFORMATION CONTAINED ON THESE DRAWINGS SUCH AS DATA, DESIGNS, AND CONCEPTS, ARE PROPERTY OF PROCADESIGN LLC. AND SHALL NOT BE USED FOR ANY OTHER PURPOSE OTHER THAN ORIGINALLY INTENDED WITHOUT WRITTEN PERMISSION OF THE DESIGNER/CONSULTANT.

#	REVISIONS	DATE
1	CITY COMMENTS	12/12/2022
2	CITY COMMENTS	4/5/2023

DANCO RESIDENCE
4441 N JOKAKE DR SCOTTSDALE AZ 85251
172-29-017

DRAWN BY: PROCA DESIGN
CONTACT #
www.procadesign.net
(602) 606-2885
angelica@procadesign.com

DATE: OCT. 2020
SCALE: PER PLAN
SHEET: SD

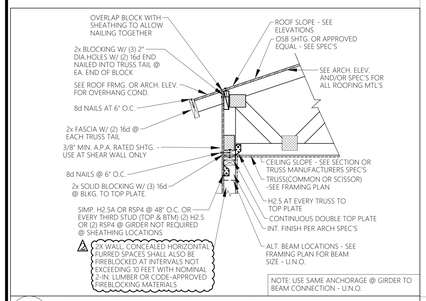

400 STUBBED TRUSS @ WALL (@ BEAM SIM.)
SCALE: 3/4" = 1'-0"

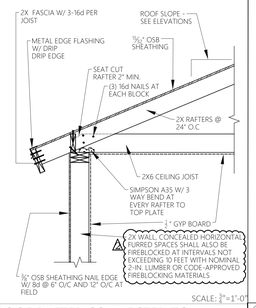

401 ROOF RAFTER CONNECTED TO WALL

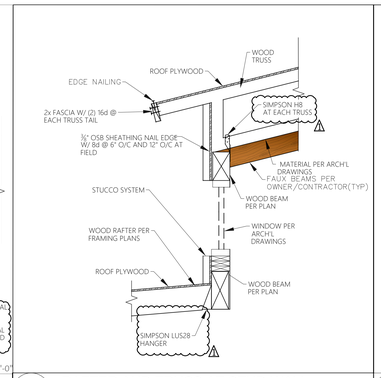

402 RAFTER AND TRUSS AT STUD WALL
N.T.S.

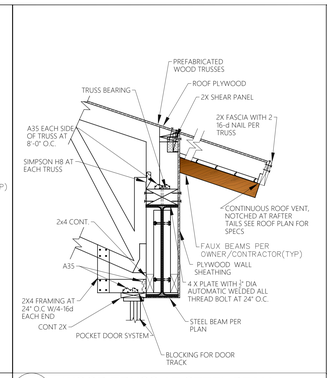

403 WOOD TRUSS AT STEEL BEAM
SCALE: 3/4" = 1'-0"

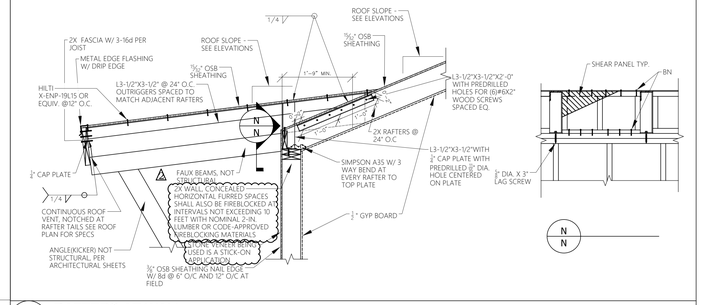

404 RAFTERS AT WALL

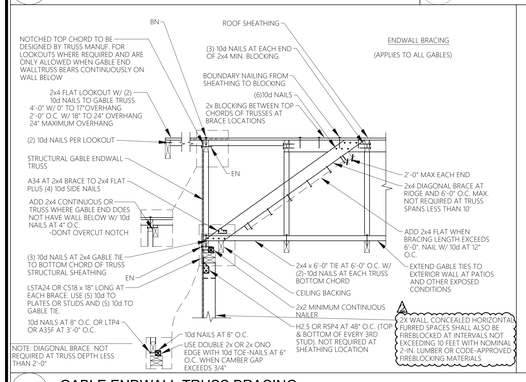

405 GABLE ENDWALL TRUSS BRACING
SCALE: 3/4" = 1'-0"

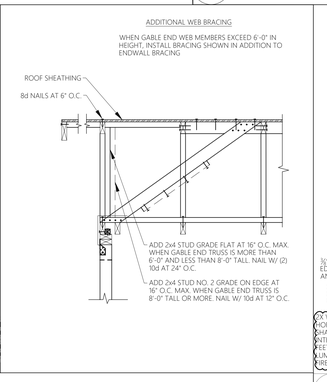

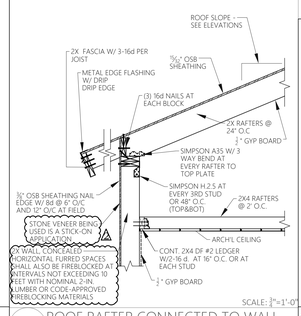

406 ROOF RAFTER CONNECTED TO WALL

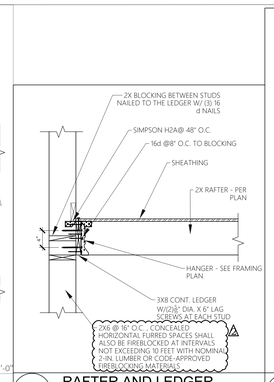

407 RAFTER AND LEDGER TO WOOD WALL
SCALE: 3/4" = 1'-0"

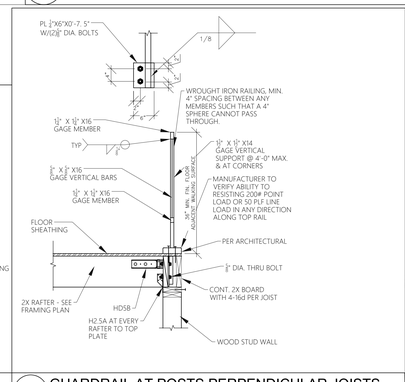

408 GUARDRAIL AT POSTS PERPENDICULAR JOISTS

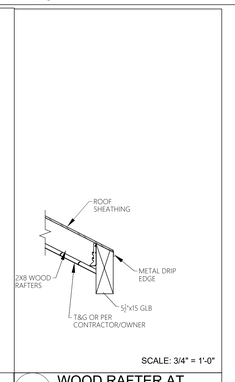

409 WOOD RAFTER AT WOOD BEAM

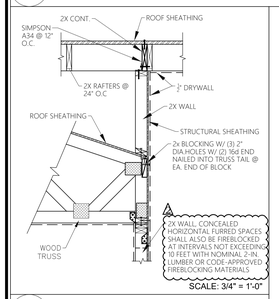

410 STUBBED TRUSS @ WALL (@ BEAM SIM.)

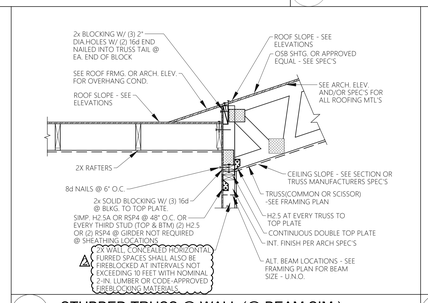

412 STUBBED TRUSS @ WALL (@ BEAM SIM.)

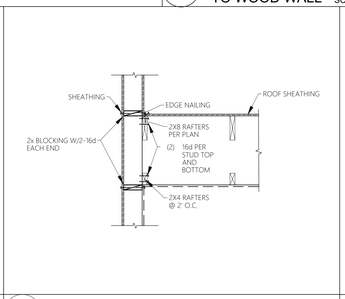

413 WOOD RAFTERS AT WOOD STUD WALL
SCALE: 3/4" = 1'-0"

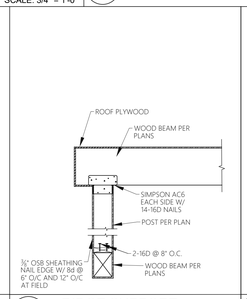

414 RIDGE SUPPORT

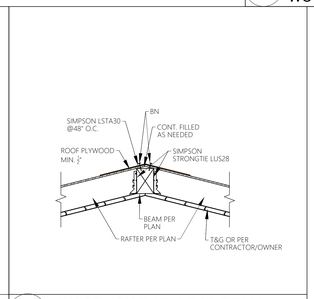

415 WOOD JOIST AT WOOD BEAM
SCALE: 3/4" = 1'-0"

In combustible construction, fire-blocking shall be provided to cut off both vertical and horizontal concealed draft openings and to form an effective fire barrier between stories, and between a top story and the roof space. Fireblocking shall be provided in wood-framed construction in concealed spaces of stud walls and partitions, including furred spaces and parallel rows of studs or staggered studs horizontally at intervals not exceeding 10 feet. Detail shall have to shown on the plans.

THIS DRAWING HAS BEEN DRAWN UNDER THE GUIDANCE OF MSD PLLC AND HAS BEEN REVIEWED FOR COMPLIANCE WITH THE STRUCTURAL CALCULATIONS AND CORRECTNESS ONLY. THE SCOPE OF MSD PLLC DOES NOT EXCEED THAT OF THE ACCOMPANYING CALCULATIONS.

REGISTERED PROFESSIONAL ENGINEER (CIVIL) CERTIFICATE NO. 32235 SCOTT E. SEEMAN DATE SIGNED 04/11/23 ARIZONA, U.S.A.

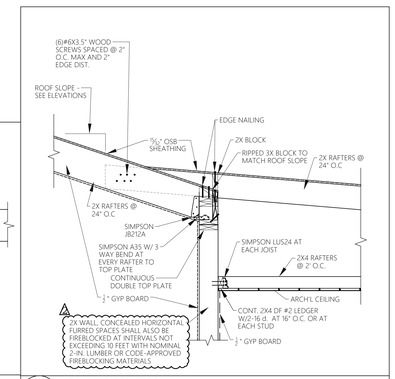

421 RAFTERS AT WALL

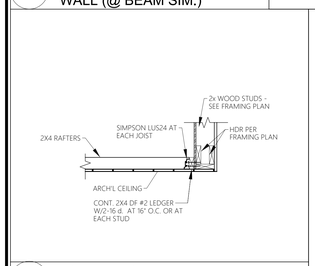

416 JOIST AT STUD WALL/HEADER
SCALE: 3/4" = 1'-0"

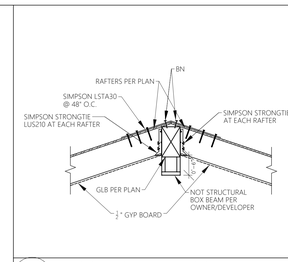

418 WOOD JOIST AT WOOD BEAM
SCALE: 3/4" = 1'-0"

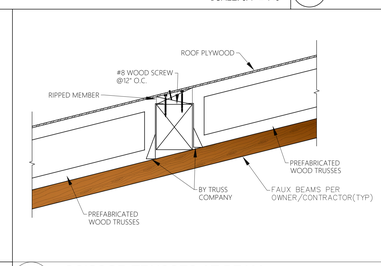

419 SCISSOR TRUSSES AT BEAM
SCALE: 3/4" = 1'-0"

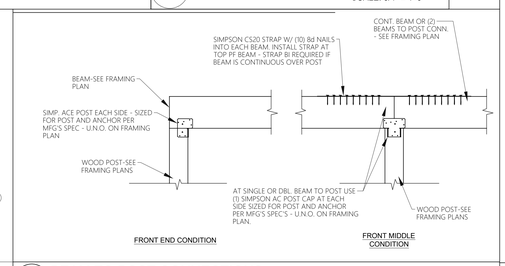

420 BEAM TO POST CONNECTIONS

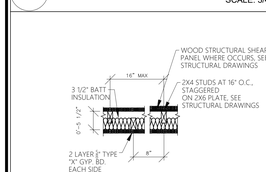

422 NOISE CONTROL STAGGERED STUD WALL
SCALE: 3/4" = 1'-0"

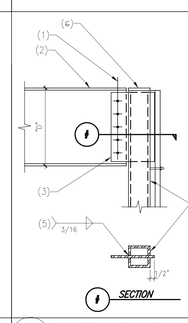

NOTES:
1. FOR SIZE, TYPE AND NUMBER OF BOLTS, SEE TYPICAL BOLT SCHEDULE.
2. STEEL BEAM.
3. 3/8" STEEL THRU PLATE – 5/8" STEEL THRU PLATE WHERE "D" = 27" OR GREATER.
4. STEEL COLUMN.
5. WELD BOTH SIDES – TYPICAL.
6. 1/2" CAP PLATE WELD ALL AROUND

SCALE: N.T.S.

423 STEEL BEAM TO STEEL COLUMN CONNECTION

NOMINAL BEAM DEPTH "D"	NUMBER OF 3/4" DIA. ASTM, A325 BOLTS
UP TO 7"	2
8" - 11"	2
12" - 14"	3
15" - 17"	4
18" - 20"	5
21" - 23"	6
24" - 29"	7
30" - 32"	8
33" - 35"	9
36"	10

FRAMING NOTES:
1. THE TYPICAL STEEL BEAM TO STEEL COLUMN OR STEEL BEAM TO STEEL BEAM CONNECTION CONSISTS OF 3/4" SINGLE SHEAR PLATES WITH 3/4" DIA. ASTM A325 BOLTS. USE 3/4" SHEAR PLATES WHERE "D" = 27" OR GREATER.
2. ALL BOLTS SHALL BE INSTALLED USING SHORT SLOTTED HOLES IN EITHER THE BEAM WEB OR THE SHEAR PLATE PER LATEST AISC SPECIFICATIONS.
3. CONNECTIONS REQUIRING DOUBLE ANGLES OR BENT PLATES WILL BE MARKED ON THE PLANS WITH AN ASTERISK (*). ALL DOUBLE ANGLES SHALL BE L4X4X[AND ALL BENT PLATES SHALL BE 3/4" THICK -DETAIL PER THE LATEST AISC STEEL CONSTRUCTION MANUAL

424 STEEL BEAM TO STEEL COLUMN CONNECTION
SCALE: N.T.S.

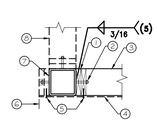

NOTES:
1. (2) 2X PLATES CONT.
2. 3/4" DIA. THREADED STUDS AT 24" O.C. AND 4" MAX FROM TOP AND BOTTOM.
3. STUD WALL.
4. WALL SHEATHING WHERE OCCURS
5. EDGE NAILING.
6. WALL END WHERE OCCURS
7. TS COLUMN.
8. STUD WALL WHERE OCCURS.

425 TYP STUD WALL TO STEEL COLUMN CONNECTION
SCALE: N.T.S.

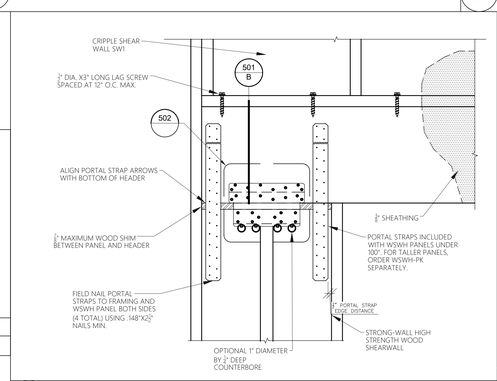

501 SIMPSON STRONG WALL TOP CONNECTION
N.T.S.

CITY OF PHOENIX
Planning and Development Department
BY: Alfredo Tadaya
05/17/2023
This set of plans has been reviewed for Structural requirements prior to issuance of Building Permit and shall be kept at the construction site. Such review shall not prevent the Building Official from requiring correction of errors in the plans where such errors are subsequently found to be in violation of any law or ordinance.

APPROVED AS NOTED

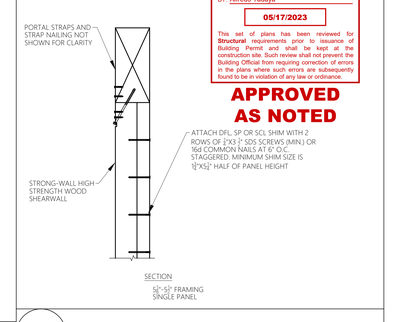

501.B SIMPSON STRONG WALL TOP CONNECTION
N.T.S.

THE INFORMATION CONTAINED ON THESE DRAWINGS SUCH AS DATA, DESIGNS, AND CONCEPTS, ARE PROPERTY OF PROCADESIGN LLC. AND SHALL NOT BE USED FOR ANY OTHER PURPOSE OTHER THAN ORIGINALLY INTENDED WITHOUT WRITTEN PERMISSION OF THE DESIGNER/CONSULTANT.

#	REVISIONS	DATE
1	CITY COMMENTS	12/12/2022
2	CITY COMMENTS	4/5/2023

DANCO RESIDENCE
4441 N JOKAKE DR SCOTTSDALE AZ 85251
172-29-017

DRAWN BY: PROCA DESIGN
CONTACT #
www.procadesign.net
(602) 606-2885
angelica@procadesign.com

DATE: OCT. 2020
SCALE: PER PLAN
SHEET: SD

WSWH-TP CONNECTION		
MODEL NO.	FASTENER QUANTITY	
	SWS16150	SDS25600
WSWH-TP12	14	2
WSWH-TP18	26	4
WSWH-TP24	46	8

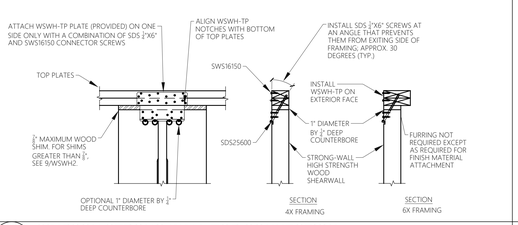

502 SIMPSON STRONG WALL TOP CONNECTION

N.T.S.

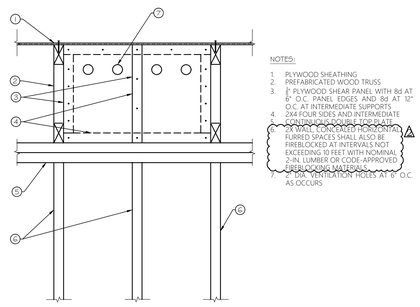

NOTES:

1. PLYWOOD SHEATHING
2. PREFABRICATED WOOD TRUSS
3. 3/8" PLYWOOD SHEAR PANEL WITH 8d AT 6" O.C. PANEL EDGES AND 8d AT 12" O.C. AT INTERMEDIATE SUPPORTS
4. 2X4 FOUR SIDES AND INTERMEDIATE CONTINUOUS DOUBLE FIREBLAKE
5. 2X WALL, CONCEALED HORIZONTAL FURRED SPACES SHALL ALSO BE FIREBLOCKED AT INTERVALS NOT EXCEEDING 10 FEET WITH NOMINAL 2-IN. LUMBER OR CODE-APPROVED FIREBLOCKING MATERIALS
6. 1/8" DIA. VENTILATION HOLES AT 6" O.C. AS OCCURS

503 SHEAR PANEL

N.T.S.

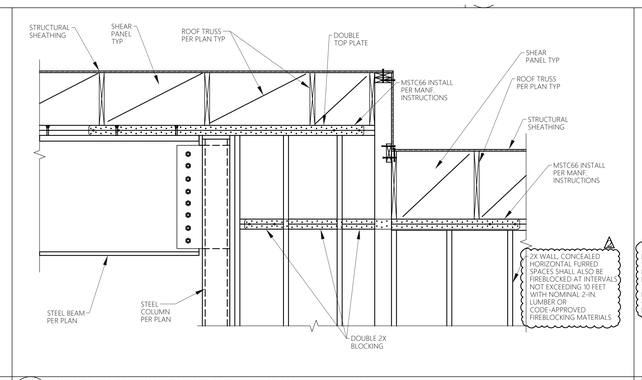

504 SLIDING GLASS DOOR OPENING CONNECTION

N.T.S.

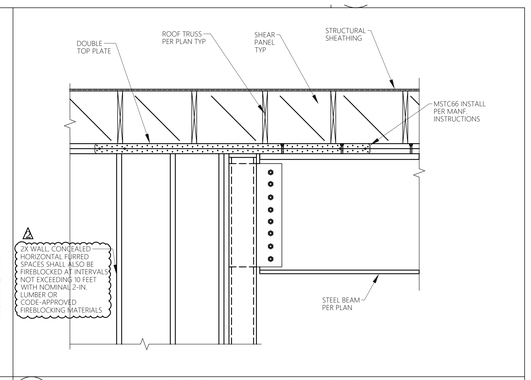

505 SLIDING GLASS DOOR OPENING CONNECTION

N.T.S.

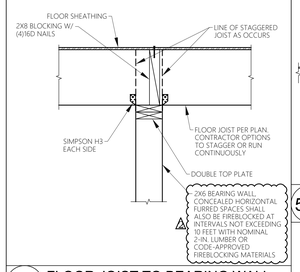

506 FLOOR JOIST TO BEARING WALL

N.T.S.

NOTES:

1. SIMPSON H3 AT EACH STUD
2. 2X6 LEDGER WITH (3) 16d NAILS PER STUD
3. DOUBLE 2x SOLID BLOCKING WITH (3) 16d PER BLOCK

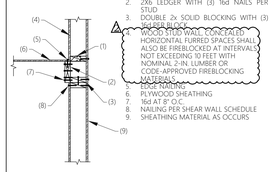

2X WOOD STUD WALL, CONCEALED HORIZONTAL FURRED SPACES SHALL ALSO BE FIREBLOCKED AT INTERVALS NOT EXCEEDING 10 FEET WITH NOMINAL 2-IN. LUMBER OR CODE-APPROVED FIREBLOCKING MATERIALS

4. EDGE NAILING
5. PLYWOOD SHEATHING
6. 16d AT 8" O.C.
7. NAILING PER SHEAR WALL SCHEDULE
8. SHEATHING MATERIAL AS OCCURS

507 LEDGER AT STUD WALL

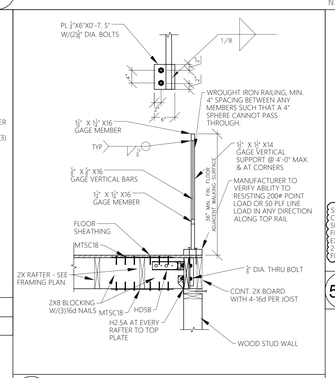

508 GUARDRAIL AT POSTS PARALLEL JOISTS

N.T.S.

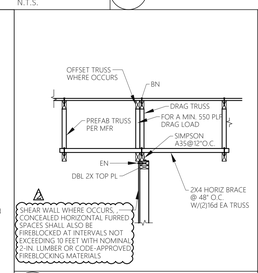

509 SHEAR TRANSFER AT TRUSS

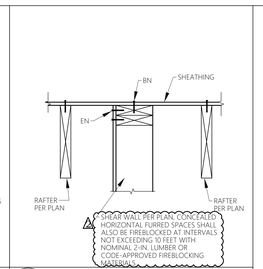

510 SHEAR TRANSFER ROOF

APPROVED AS NOTED

CITY OF PHOENIX
Planning and Development Department

BY: Alfredo Tadaya

05/17/2023

This set of plans has been reviewed for **Structural** requirements prior to issuance of Building Permit and shall be kept at the construction site. Such review shall not prevent the Building Official from requiring correction of errors in the plans where such errors are subsequently found to be in violation of any law or ordinance.

THIS DRAWING HAS BEEN DRAWN UNDER THE GUIDANCE OF MSD PLLC AND HAS BEEN REVIEWED FOR COMPLIANCE WITH THE STRUCTURAL CALCULATIONS AND CORRECTNESS ONLY. THE SCOPE OF MSD PLLC DOES NOT EXCEED THAT OF THE ACCOMPANYING CALCULATIONS.

Registered Professional Engineer CERTIFICATE NO. 22235 SCOTT E. SEEMAN Date Signed 04/21/23 ARIZONA, U.S.A.

PROCA DESIGN LLC

THE INFORMATION CONTAINED ON THESE DRAWINGS SUCH AS DATA, DESIGNS, AND CONCEPTS, ARE PROPERTY OF PROCADESIGN LLC. AND SHALL NOT BE USED FOR ANY OTHER PURPOSE OTHER THAN ORIGINALLY INTENDED WITHOUT WRITTEN PERMISSION OF THE DESIGNER/CONSULTANT.

#	REVISIONS	DATE
1	CITY COMMENTS	12/12/2022
2	CITY COMMENTS	4/5/2023

DANCO RESIDENCE

4441 N JOKAKE DR SCOTTSDALE AZ 85251

172-29-017

DRAWN BY:
PROCA DESIGN
CONTACT #
www.procadesign.net
(602) 606-2885
angelica@procadesign.com

DATE:
OCT. 2020

SCALE:
PER PLAN

SHEET:
SD

CITY OF PHOENIX
Planning and Development Department

By: KLA
(KEITH LANGLOIS)

05/08/2023

This set of plans has been reviewed for ELECTRICAL prior to issuance of Building Permit and shall be kept at the construction site. Such review shall not prevent the Building Official from requiring correction of errors in the plans where such errors are subsequently found to be in violation of any law or ordinance.

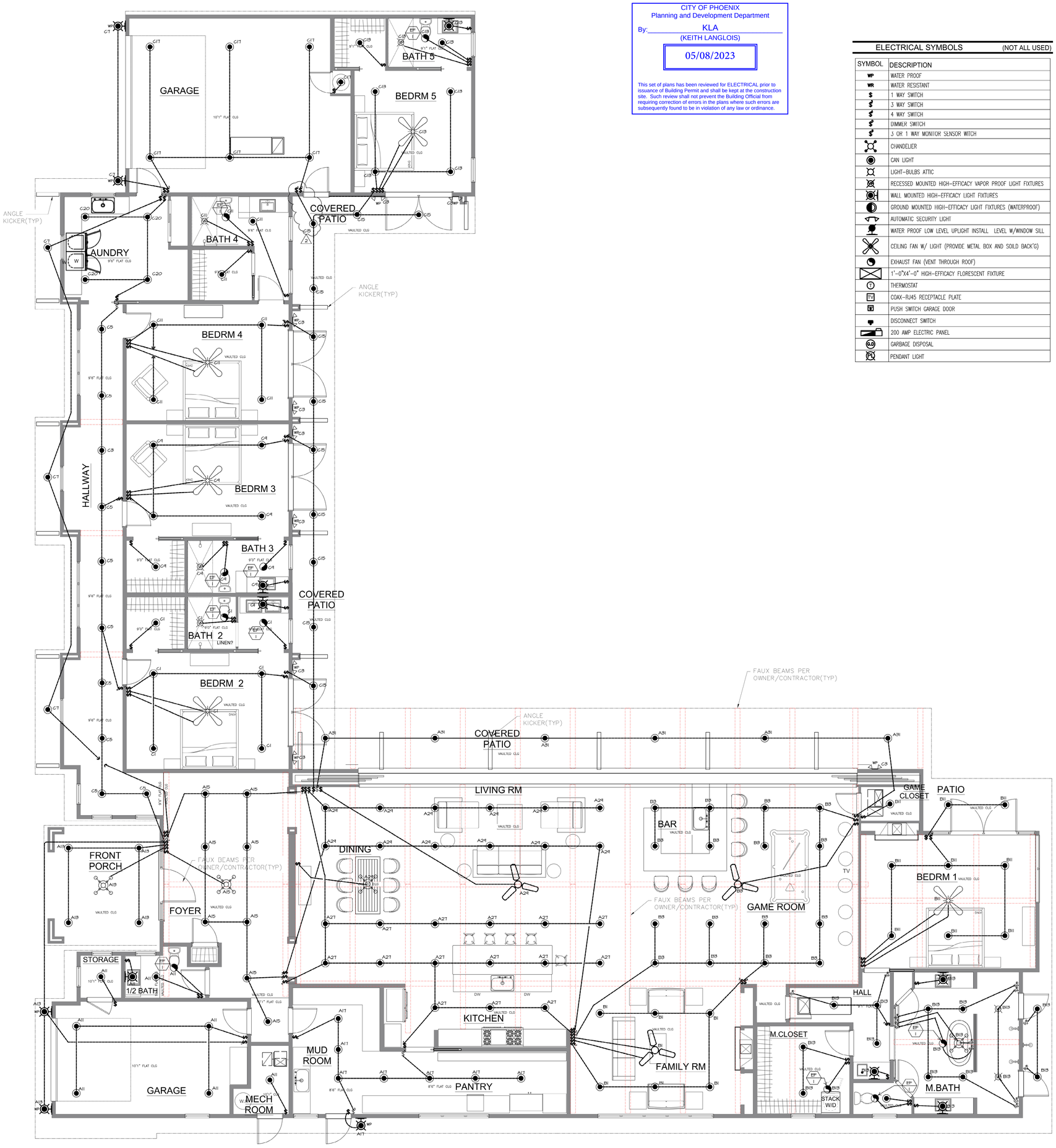

ELECTRICAL SYMBOLS (NOT ALL USED)

SYMBOL	DESCRIPTION
WP	WATER PROOF
WR	WATER RESISTANT
$	1 WAY SWITCH
$	3 WAY SWITCH
$	4 WAY SWITCH
$	DIMMER SWITCH
$	3 OR 1 WAY MONITOR SENSOR WITCH
	CHANDELIER
	CAN LIGHT
	LIGHT-BULBS ATTIC
	RECESSED MOUNTED HIGH-EFFICACY VAPOR PROOF LIGHT FIXTURES
	WALL MOUNTED HIGH-EFFICACY LIGHT FIXTURES
	GROUND MOUNTED HIGH-EFFICACY LIGHT FIXTURES (WATERPROOF)
	AUTOMATIC SECURITY LIGHT
	WATER PROOF LOW LEVEL UPLIGHT INSTALL LEVEL W/WINDOW SILL
	CEILING FAN W/ LIGHT (PROVIDE METAL BOX AND SOILD BACK'G)
	EXHAUST FAN (VENT THROUGH ROOF)
	1'-0"X4'-0" HIGH-EFFICACY FLORESCENT FIXTURE
T	THERMOSTAT
TV	COAX-RJ45 RECEPTACLE PLATE
	PUSH SWITCH GARAGE DOOR
	DISCONNECT SWITCH
	200 AMP ELECTRIC PANEL
G.D	GARBAGE DISPOSAL
PL	PENDANT LIGHT

RECESSED LIGHT FIXTURE

RECESSED LUMINARIES INSTALLED IN THE BUILDING THERMAL ENVELOPE SHALL BE SEALED TO LIMIT AIR LEAKAGE BETWEEN CONDITIONED AND UNCONDITIONED SPACES. ALL RECESSED LUMINARIES SHALL BE IC-RATED AND LABELED AS MEETING ASTM E 283 WHEN TESTED AT 1.57 PSF (75 PA) PRESSURE DIFFERENTIAL WITH NO MORE THAN 2.0 CFM (0.944 L/S) OF AIR MOVEMENT FROM THE CONDITIONED SPACE TO THE CEILING CAVITY. ALL RECESSED LUMINARIES SHALL BE SEALED WITH A GASKET OR CAULK BETWEEN THE HOUSING AND THE INTERIOR WALL OR CEILING COVERING.
COMBUSTIBLE INSULATION SHALL BE SEPARATED NOT LESS THAN 3 INCH (76 mm) FROM RECESSED LUMINARIES, FAN MOTOR AND OTHER HEAT PRODUCING DEVICES. (IRC R302.14)

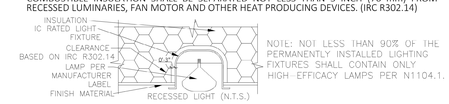

FAN MOUNTAIN DETAIL

RECESSED E3905.8 BOXES AT FAN OUTLETS. OUTLET BOXES AND OUTLET BOX SYSTEMS USED AS THE SOLE SUPPORT OF CEILING-SUSPENDED FANS (PADDLE) SHALL BE MARKED BY THEIR MANUFACTURER AS SUITABLE FOR THIS PURPOSE AND SHALL NOT SUPPORT CEILING-SUSPENDED FANS (PADDLE) THAT WEIGH MORE THAN 70 POUNDS (31.8 KG). FOR OUTLET BOXES AND OUTLET BOX SYSTEMS DESIGNED TO SUPPORT CEILING-SUSPENDED FANS (PADDLE) THAT WEIGH MORE THAN 35 POUNDS (15.9 KG), THE REQUIRED MARKING SHALL INCLUDE THE MAXIMUM WEIGHT TO BE SUPPORTED.
WHERE SPARE, SEPARATELY SWITCHED, UNGROUNDED CONDUCTORS ARE PROVIDED TO A CEILING-MOUNTED OUTLET BOX AND SUCH BOX IS IN A LOCATION ACCEPTABLE FOR A CEILING-SUSPENDED (PADDLE) FAN, THE OUTLET BOX OR OUTLET BOX SYSTEM SHALL BE LISTED FOR SOLE SUPPORT OF A CEILING-SUSPENDED (PADDLE) FAN. [2017 NEC 314.27(C)]

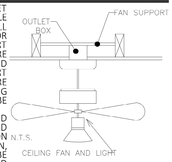

ELECTRICAL GENERAL NOTES

A. OUTLET PLACEMENT SHALL COMPLY WITH N.E.C. 2017.
B. ALL RECEPTACLES LISTED IN 2017 NEC 406.12 SHALL BE TAMPER-RESISTANT RECEPTACLES.
C. APPLICABLE REQUIREMENTS OF THE NATIONAL ELECTRICAL CODE (NEC 2017) AND STATE AND LOCAL CODES SHALL GOVERN AND DETERMINE THE MINIMUM STANDARD OF WORK. IN THE EVENT OF CONFLICT BETWEEN THIS DRAWING AND THE APPLICABLE CODE, THE CODE SHALL PREVAIL, AND THE INSTALLATION SHALL BE MADE IN CONFORMANCE WITH THE CODE.
D. EVEN IF NOT SPECIFICALLY SHOWN ON THE ELECTRICAL PLAN, PROVIDE RECEPTACLE OUTLET ON ALL WALLS 24 INCHES OR MORE IN LENGTH IN REQUIRED AREAS. 2017 NEC 210.52(A).
E. EVERY CIRCUIT AND CIRCUIT MODIFICATION SHALL LEGIBLY IDENTIFIED AS TO ITS CLEAR, EVIDENT AND SPECIFIC PURPOSE OR USE PER NEC 408.4 NO GENERAL LIGHTING, MUST BE SPECIFIC TO ITS USE.
F. APPLIANCES INSTALLED IN A COMPARTMENT, ALCOVE, BASEMENT OR SIMILAR SPACE SHALL BE ACCESSED BY AN OPENING OR DOOR AND AN UNOBSTRUCTED PASSAGEWAY MEASURING NOT LESS THAN 24" WIDE WIDE AND HAVE A WORKING SPACE A MINIMUM OF 30" WIDE AND AT LEAST AS TALL AS THE UNIT PER M1305.1.2. SMALL APPLIANCE RECEPTACLES (2018 IRC E3901.3) EVERY KITCHEN, FAMILY ROOM, DINING ROOM, LIVING ROOM, PARLOR, LIBRARY, DEN, BEDROOM, SUNROOM, RECREATION ROOM, CLOSETS, HALLWAYS, LAUNDRY AREAS, OR SIMILAR ROOMS OR AREAS, RECEPTACLE OUTLETS SHALL BE INSTALLED IN ACCORDANCE WITH THE GENERAL PROVISIONS SPECIFIED IN SECTION E3901.2 THROUGH E3901.12 AS WELL AS 2017 NEC 210.52(B)(1).
G. KITCHEN AND DINING AREA RECEPTACLES: A MINIMUM OF TWO (2) 20-AMP-RATED BRANCH CIRCUITS SHALL BE PROVIDED TO OUTLETS IN THE KITCHEN, PANTRY, BREAKFAST AREA, DINING AREA, OR SIMILAR AREA OF A DWELLING. 2018 IRC R3703 & 2017 NEC 210.11, 210.52.
H. KITCHEN OUTLETS ABOVE COUNTER TO BE GFCI +44 AND DOWN.
I. GFCI PROTECTION SHALL BE PROVIDED FOR OUTLETS THAT SUPPLY DISHWASHERS INSTALLED IN DWELLING UNIT LOCATIONS. 2017 NEC 210.8(D).
J. THE DINING ROOM RECEPTACLE CIRCUIT SHALL BE MINIMUM 20 AMP. 2017 NEC ARTICLE 210.52(B) AND (C), AS APPLICABLE.
K. RANGE/OVEN AND ELECTRICAL DRYER SHALL BE SUPPLIED BY 4 WIRE RECEPTACLES.
L. OUTLETS INSTALLED IN THE GARAGE SIDE OF THE WALL BETWEEN THE DWELLING AND GARAGE SHALL BE OF MATERIAL(S) LISTED IN 2018 IRC R302.4.2.
M. GARAGES & ACCESSORY BUILDINGS: NOT LESS THAN ONE (1) RECEPTACLE OUTLET SHALL BE INSTALLED PER 2018 IRC E3901.9 (w/CITY OF PHOENIX AMENDMENTS) AND IN EACH VEHICLE BAY AT NOT LESS THAN (18) INCHES ABOVE THE FLOOR. 2017 NEC 210.52(G)(1), (2), AND (3).
N. GARAGE RECEPTACLES MUST BE ON A SEPARATE 20A CIRCUIT. GARAGE DOOR OPENERS AND GARAGE LIGHTING SHALL NOT BE ON THIS CIRCUIT. GARAGE DOOR OPENERS LOAD CALCULATIONS SHALL BE SEPARATE FROM OTHER CIRCUITS IN THE GARAGE. 2017 NEC, ART. 210.11 (C) (4).
O. LIGHTING OUTLETS SHALL BE INSTALLED WHERE SPECIFIED IN 210.70(A), (B), AND (C).
P. ALL RECESSED LIGHTS IN SHOWER/TUB AREAS TO BE SHOWER-RATED RECESSED CAN LIGHTS.
Q. ALL RECESSED CAN LIGHTS TO BE "AIR-TIGHT" & I.C. RATED WITH NO PENETRATIONS INSIDE THE RECESSED FIXTURE PER I.E.C.C. 402.4.3 #1, 2 OR 3.
R. E4003.9 WET OR DAMP LOCATIONS.- LUMINAIRES INSTALLED IN WET OR DAMP LOCATIONS SHALL BE INSTALLED SO THAT WATER CANNOT ENTER OR ACCUMULATE IN WIRING COMPARTMENTS, LAMPHOLDERS OR OTHER ELECTRICAL PARTS. ALL LUMINAIRES INSTALLED IN WET LOCATIONS SHALL BE MARKED "SUITABLE FOR WET LOCATIONS." ALL LUMINAIRES INSTALLED IN DAMP LOCATIONS SHALL BE MARKED "SUITABLE FOR WET LOCATIONS" OR "SUITABLE FOR DAMP LOCATIONS."(IRC E410.10).
S. RECEPTACLES SHALL BE INSTALLED SO THAT NO POINT MEASURED HORIZONTALLY ALONG THE FLOOR LINE OF ANY WALL SPACE IS MORE THAN 6 FEET (1829 MM), (2018 IRC E3901.2.1) FROM A RECEPTACLE OUTLET. (2017 NEC 210.52(A)(1)).
T. HEATING, AIR-CONDITIONING, AND REFRIGERATION EQUIPMENT OUTLET SHALL BE INSTALLED AT AN ACCESSIBLE LOCATION FOR SERVICING OF EQUIPMENT AND AS PER 2017 NEC 210.63.
U. E3901.12 HVAC OUTLET.-A 125-VOLT, SINGLE-PHASE, 15- OR 20-AMPERE-RATED RECEPTACLE OUTLET SHALL BE INSTALLED AT AN ACCESSIBLE LOCATION FOR THE SERVICING OF HEATING, AIR-CONDITIONING AND REFRIGERATION EQUIPMENT. THE RECEPTACLE SHALL BE LOCATED ON THE SAME LEVEL AND WITHIN 25 FEET (7620 MM) OF THE HEATING, AIR-CONDITIONING AND REFRIGERATION EQUIPMENT. THE RECEPTACLE OUTLET SHALL NOT BE CONNECTED TO THE LOAD SIDE OF THE HVAC EQUIPMENT DISCONNECTING MEANS. (210.63) EXCEPTION: A RECEPTACLE OUTLET SHALL NOT BE REQUIRED FOR THE SERVICING OF EVAPORATIVE COOLERS. (210.63 EXCEPTION).
V. E3802.2 CABLES IN ACCESSIBLE ATTICS.- CABLES IN ATTICS OR ROOF SPACES PROVIDED WITH ACCESS SHALL BE INSTALLED AS SPECIFIED IN SECTIONS E3802.2.1 AND E3802.2.2. (320.3 AND 334.23).
   V.A. E3802.2.1 ACROSS STRUCTURAL MEMBERS.-WHERE RUN ACROSS THE TOP OF FLOOR JOISTS, OR RUN WITHIN 7 FEET (2134 MM) OF FLOOR OR FLOOR JOISTS ACROSS THE FACE OF RAFTERS OR STUDDING, IN ATTICS AND ROOF SPACES THAT ARE PROVIDED WITH ACCESS, THE CABLE SHALL BE PROTECTED BY SUBSTANTIAL GUARD STRIPS THAT ARE AT LEAST AS HIGH AS THE CABLE. WHERE SUCH SPACES ARE NOT PROVIDED WITH ACCESS BY PERMANENT STAIRS OR LADDERS, PROTECTION SHALL ONLY BE REQUIRED WITHIN 6 FEET (1829 MM) OF THE NEAREST EDGE OF THE ATTIC ENTRANCE. [320.23(A) AND 334.23]
   V.B. E3802.2.2 CABLE INSTALLED THROUGH OR PARALLEL TO FRAMING MEMBERS. WHERE CABLES ARE INSTALLED THROUGH OR PARALLEL TO THE SIDES OF RAFTERS, STUDS OR FLOOR JOISTS, GUARD STRIPS AND RUNNING BOARDS SHALL NOT BE REQUIRED, AND THE INSTALLATION SHALL COMPLY WITH TABLE E3802.1. [320.23(B) AND 334.23].
W. PROVIDE A BONDING CONDUCTOR-MINIMUM OF ON #4 COPPER WIRE CONNECTING THE BUILDERS WATER PIPING SYSTEM TO THE SERVICE EQUIPMENT ENCLOSURE GROUNDING BUSS [2017 NEC 250...]
X. AT LEAST ONE (1) 120-VOLT, 20-AMP BRANCH CIRCUIT SHALL BE INSTALLED TO SUPPLY RECEPTACLE OUTLETS IN ATTACHED GARAGES AND IN DETACHED GARAGES WITH ELECTRIC POWER. THIS CIRCUIT SHALL HAVE NO OTHER OUTLETS. (SEE IRC E3703.5). 2017 NEC 210.11(C)(4).
Y. PROVIDE ACCESS AND WORKING SPACE ABOUT ALL ELECTRICAL EQUIPMENT (INCLUDING DISCONNECTS) PER 2017 NEC 110.26 & 2018 IRC R3405.
Z. MEMBRANE PENETRATION SHALL COMPLY WITH SECTION R302.4.1. WHERE WALLS ARE REQUIRED TO HAVE A FIRE-RESISTANT RATING. RECESSED FIXTURES SHALL BE INSTALLED SO THAT THE REQUIRED FIRE-RESISTANCE RATING WILL NOT BE REDUCED.
AA. ALL EXTERIOR ELECTRICAL RECEPTACLES SHALL BE GROUND FAULT CIRCUIT PROTECTED AND MUST BE WATER PROOF
AB. 200 AMP. SERVICE WITH METER; VERIFY LOCATION.
AC. VERIFY ALL CEILING LIGHT FIXTURES WITH MECHANICAL CONTRACTOR.
AD. ELECTRICAL CONTRACTOR TO PROVIDE REQUIRED DIRECT HOOK-UPS/CUT-OFFS, AND INSURE ALL VOLTAGES ARE COORDINATED WITH EQUIPMENT AND APPLIANCES, ALL ALL CIRCUITRY IS CORRECT AND ALL CODES AND ORDINANCES ARE MET. ELECTRICAL CONTRACTOR SHALL INSTALL ALL EQUIPMENT IN ACCORDANCE WITH MANUFACTURERS SPECIFICATIONS.
AE. HVAC CONTRACTOR TO VERIFY THERMOSTAT LOCATION.
AF. E3903.3 ADDITIONAL LOCATIONS. AT LEAST ONE WALL-SWITCH-CONTROLLED LIGHTING OUTLET SHALL BE INSTALLED IN HALLWAYS, STAIRWAYS, ATTACHED GARAGES, AND DETACHED GARAGES WITH ELECTRIC POWER. AT LEAST ONE WALL-SWITCH-CONTROLLED LIGHTING OUTLET SHALL BE INSTALLED TO PROVIDE ILLUMINATION ON THE EXTERIOR SIDE OF EACH OUTDOOR EGRESS DOOR HAVING GRADE LEVEL ACCESS, INCLUDING OUTDOOR EGRESS DOORS FOR ATTACHED GARAGES AND DETACHED GARAGES WITH ELECTRIC POWER. A VEHICLE DOOR IN A GARAGE SHALL NOT BE CONSIDERED AS AN OUTDOOR EGRESS DOOR.
AG. M1305.1.2.1 ELECTRICAL REQUIREMENTS. A LUMINARIES CONTROLLED BY A SWITCH LOCATED AT THE REQUIRED PASSAGEWAY OPENING AND A RECEPTACLE OUTLET SHALL BE INSTALLED AT OR NEAR THE APPLIANCE LOCATION IN ACCORDANCE WITH CHAPTER 39. EXPOSED LAMPS SHALL BE PROTECTED FROM DAMAGE BY LOCATION OR LAMP GUARDS.

MAIN ELECTRICAL LIGHTING PLAN

SCALE: 1/4" = 1'-0"

NORTH

THE INFORMATION CONTAINED ON THESE DRAWINGS SUCH AS DATA, DESIGNS, AND CONCEPTS, ARE PROPERTY OF PROCADESIGN LLC. AND SHALL NOT BE USED FOR ANY OTHER PURPOSE OTHER THAN ORIGINALLY INTENDED WITHOUT WRITTEN PERMISSION OF THE DESIGNER/CONSULTANT.

#	REVISIONS	DATE
1	CITY COMMENTS	12-21-22
2	CITY COMMENTS	03-20-23

DANCO RESIDENCE

4441 N JOKAKE DR SCOTTSDALE AZ 85251

172-29-017

DRAWN BY:
ProCa Design
CONTACT #
www.procadesign.net
(602) 606-2885
angelica@procadesign.com

DATE:
OCT. 2020

SCALE:
PER PLAN

SHEET:
E1

30624 STEPHEN E. FOSTER 03-09-23 ARIZONA, USA
Expires 9-30-2023
aSf Consultants
Electrical
Engineering
5140 West Trotter Trail
Phoenix, Arizona 85083
phone (602) 565-7720
e-mail: asfconsultants@cox.com

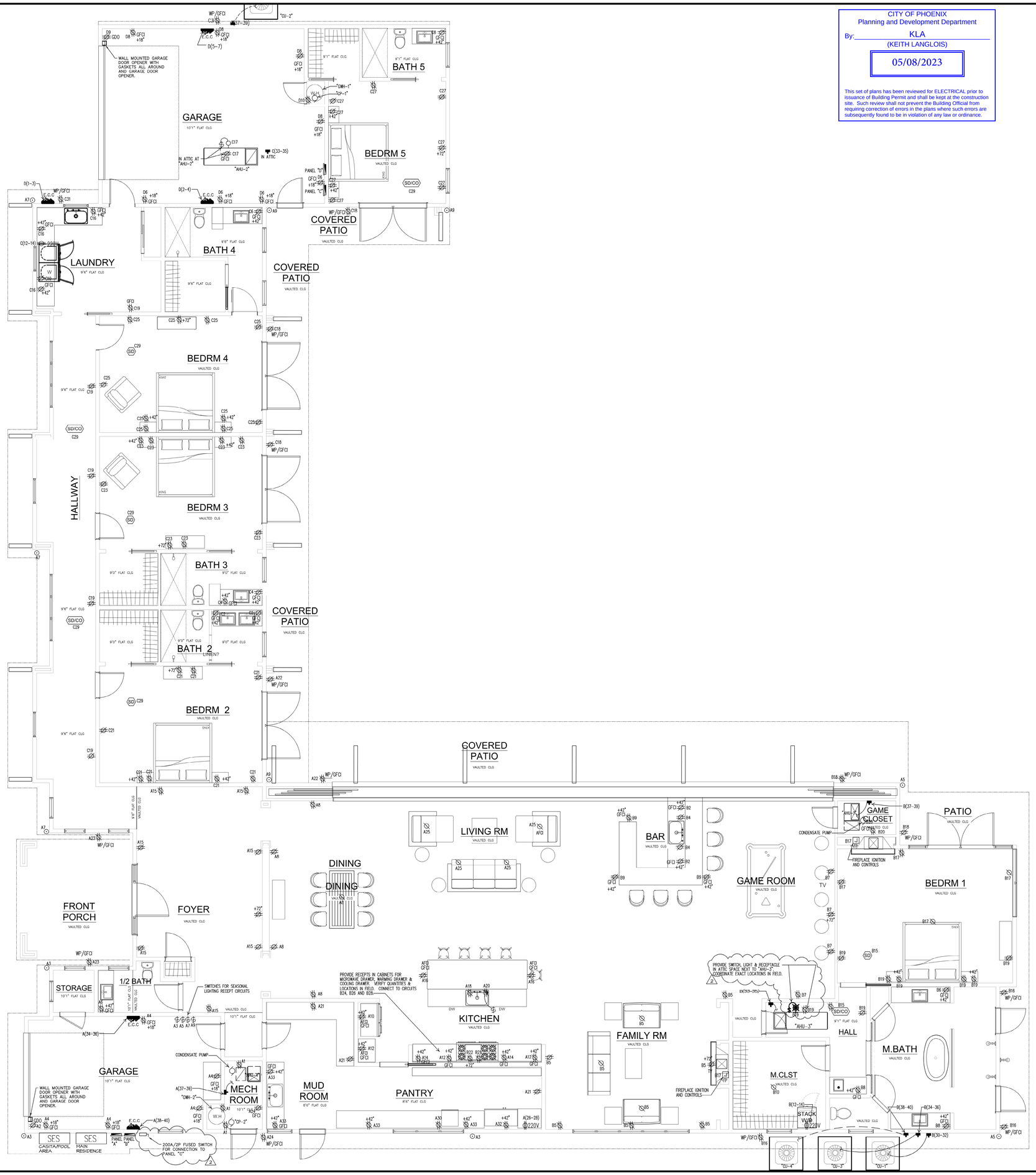

MAIN ELECTRICAL POWER PLAN

SCALE: 1/4" = 1'-0"

CITY OF PHOENIX
Planning and Development Department

By: KLA
(KEITH LANGLOIS)

05/08/2023

This set of plans has been reviewed for ELECTRICAL prior to issuance of Building Permit and shall be kept at the construction site. Such review shall not prevent the Building Official from requiring correction of errors in the plans where such errors are subsequently found to be in violation of any law or ordinance.

ELECTRICAL SYMBOLS

(NOT ALL USED)

SYMBOL	DESCRIPTION
220V	OUTLET-220V
	OUTLET-SINGLE
	OUTLET-DUPLEX
GFCI	GROUND FAULT CIRCUIT INTERRUPTER
WP/GFCI	OUTLET DUPLEX GFCI WATERPROOF
	OUTLET DUPLEX FOR SEASONAL LIGHTING/WATER PROOF. GROUND FAULT PROTECTION TO BE PROVIDED AT BREAKER IN PANEL
	OUTLET DUPLEX FLOOR
GDO	OUTLET DUPLEX GARAGE DOOR. PROVIDE AFCI/GFCI BREAKER IN PANEL.
	OUTLET DUPLEX - 1/2 SWITCHED FOR DISPOSAL/DISHWASHER
SD	110V SMOKE DETECTOR INTERCONNECTED TO BE HARD WIRED W/ BATTERY BACK UP. ACCORDING WITH (IRC R314 & R315)
SD/CO	SMOKE DETECTOR AND CARBON MONOXIDE DETECTOR ALARM TO BE W/ BACK UP. ACCORDING WITH (IRC R314 & R315)
	DISCONNECT SWITCH W/ A MAX 60 AMPS
	SES WITH ELECTRIC METER/PANEL
	SUB-PANEL

CARBON MONOXIDE ALARMS

A. CARBON MONOXIDE ALARMS (BASED ON R315).
- A.A. CARBON MONOXIDE ALARM MUST BE INSTALLED OUTSIDE OF EACH SEPARATE SLEEPING AREA IN IMMEDIATE VICINITY OF BEDROOM.
- A.B. FOR NEW CONSTRUCTION,CARBON MONOXIDE ALARMS MUST BE PROVIDED IN DWELLING UNITS THAT:
  - A.B.A. CONTAIN A FUEL-FIRED APPLIANCE.
  - A.B.B. HAVE AN ATTACHED GARAGE WITH AN OPENING THAT COMMUNICATES WITH THE DWELLING UNIT.

B. ALTERATIONS, REPAIRS OR ADDITIONS THAT REQUIRE A PERMIT MUST COMPLY WITH NEW CONSTRUCTION REQUIREMENTS.

ARC FAUTL CIRCUIT-INTERRUPTED NOTE:

ARC-FAULT CIRCUIT-INTERRUPTER PROTECTION (IRC E3902.16): ALL 120-VOLT, SINGLE-PHASE, 15- & 20-AMP BRANCH CIRCUITS SUPPLYING OUTLETS OR DEVICES INSTALLED IN DWELLING UNIT KITCHENS, FAMILY ROOMS, DINING ROOMS, LIVING ROOMS, PARLORS, LIBRARIES, DENS, BEDROOMS, SUNROOMS, RECREATION ROOMS, CLOSETS, HALLWAYS, LAUNDRY AREAS, OR SIMILAR ROOMS OR AREAS SHALL BE PROTECTED BY ANY OF THE MEANS DESCRIBED IN 2017 NEC 210.12(A)(1) THROUGH (6).

SMOKE DETECTOR NOTES

A. SMOKE ALARMS SHALL COMPLY WITH NFPA 72 AND SECTION IRC R314. BE LOCATION (R314.3) SMOKE ALARMS SHALL BE INSTALLED IN THE FOLLOWING LOCATIONS:
- A.A. IN EACH SLEEPING ROOM.
- A.B. OUTSIDE EACH SEPARATE SLEEPING AREA IN THE IMMEDIATE VICINITY OF THE BEDROOMS.
- A.C. ON EACH ADDITIONAL STORY OF THE DWELLING, INCLUDING BASEMENTS AND HABITABLE ATTICS AND NOT INCLUDING CRAWL SPACES AND UNINHABITABLE ATTICS. IN DWELLINGS OR DWELLING UNITS WITH SPLIT LEVELS AND WITHOUT AN INTERVENING DOOR BETWEEN THE ADJACENT LEVELS, A SMOKE ALARM INSTALLED ON THE UPPER LEVEL SHALL SUFFICE FOR THE ADJACENT LOWER LEVEL PROVIDED THAT THE LOWER LEVEL IS LESS THAN ONE FULL STORY BELOW THE UPPER LEVEL.
- A.D. SMOKE ALARMS SHALL BE INSTALLED NOT LESS THAN 3 FEET (914 M M) HORIZONTALLY FROM THE DOOR OR OPENING OF A BATHROOM THAT CONTAINS A BATHTUB OR SHOWER UNLESS THIS WOULD PREVENT PLACEMENT OF A SMOKE ALARM REQUIRED BY THIS SECTION.

ELECTRICAL GENERAL NOTES

A. OUTLET PLACEMENT SHALL COMPLY WITH N.E.C. 2017.
B. ALL RECEPTACLES LISTED IN 2017 NEC 406.12 SHALL BE TAMPER-RESISTANT RECEPTACLES.
C. APPLICABLE REQUIREMENTS OF THE NATIONAL ELECTRICAL CODE (NEC 2017) AND STATE AND LOCAL CODES SHALL GOVERN AND DETERMINE THE MINIMUM STANDARD OF WORK. IN THE EVENT OF CONFLICT BETWEEN THIS DRAWING AND THE APPLICABLE CODE, THE CODE SHALL PREVAIL, AND THE INSTALLATION SHALL BE MADE IN CONFORMANCE WITH THE CODE.
D. EVEN IF NOT SPECIFICALLY SHOWN ON THE ELECTRICAL PLAN, PROVIDE RECEPTACLE OUTLET ON ALL WALLS 24 INCHES OR MORE IN LENGTH IN REQUIRED AREAS. 2017 NEC 210.52(A).
E. EVERY CIRCUIT AND CIRCUIT MODIFICATION SHALL LEGIBLY IDENTIFIED AS TO ITS CLEAR, EVIDENT AND SPECIFIC PURPOSE OR USE PER NEC 408.4 NO GENERAL LIGHTING, MUST BE SPECIFIC TO ITS USE
F. APPLIANCES INSTALLED IN A COMPARTMENT, ALCOVE, BASEMENT OR SIMILAR SPACE SHALL BE ACCESSED BY AN OPENING OR DOOR AND AN UNOBSTRUCTED PASSAGEWAY MEASURING NOT LESS THAN 24" WIDE WIDE AND HAVE A WORKING SPACE A MINIMUM OF 30" WIDE AND AT LEAST AS TALL AS THE UNIT PER M1305.1.2. SMALL APPLIANCE RECEPTACLES (2018 IRC E3901.3) EVERY KITCHEN, FAMILY ROOM, DINING ROOM, LIVING ROOM, PARLOR, LIBRARY, DEN, BEDROOM, SUNROOM, RECREATION ROOM, CLOSETS, HALLWAYS, LAUNDRY AREAS, OR SIMILAR ROOMS OR AREAS, RECEPTACLE OUTLETS SHALL BE INSTALLED IN ACCORDANCE WITH THE GENERAL PROVISIONS SPECIFIED IN SECTION E3901.2 THROUGH E3901.12 AS WELL AS 2017 NEC 210.52(B)(1).
G. KITCHEN AND DINING AREA RECEPTACLES: A MINIMUM OF TWO (2) 20-AMP-RATED BRANCH CIRCUITS SHALL BE PROVIDED TO OUTLETS IN THE KITCHEN, PANTRY, BREAKFAST AREA, DINING AREA, OR SIMILAR AREA OF A DWELLING. 2018 IRC R3703 & 2017 NEC 210.11, 210.52.
H. KITCHEN OUTLETS ABOVE COUNTER TO BE GFCI +44 AND DOWN.
I. GFCI PROTECTION SHALL BE PROVIDED FOR OUTLETS THAT SUPPLY DISHWASHERS INSTALLED IN DWELLING UNIT LOCATIONS. 2017 NEC 210.8(D).
J. THE DINING ROOM RECEPTACLE CIRCUIT SHALL BE MINIMUM 20 AMP. 2017 NEC ARTICLE 210.52(B) AND (C), AS APPLICABLE.
K. RANGE/OVEN AND ELECTRICAL DRYER SHALL BE SUPPLIED BY 4 WIRE RECEPTACLES.
L. OUTLETS INSTALLED IN THE GARAGE SIDE OF THE WALL BETWEEN THE DWELLING AND GARAGE SHALL BE OF MATERIAL(S) LISTED IN 2018 IRC R302.4.2.
M. GARAGES & ACCESSORY BUILDINGS: NOT LESS THAN ONE (1) RECEPTACLE OUTLET SHALL BE INSTALLED PER 2018 IRC E3901.9 (w/CITY OF PHOENIX AMENDMENTS) AND IN EACH VEHICLE BAY AT NOT LESS THAN (18) INCHES ABOVE THE FLOOR. 2017 NEC 210.52(G)(1), (2), AND (3).
N. GARAGE RECEPTACLES MUST BE ON A SEPARATE 20A CIRCUIT. GARAGE DOOR OPENERS AND GARAGE LIGHTING SHALL NOT BE ON THIS CIRCUIT. GARAGE DOOR OPENERS LOAD CALCULATIONS SHALL BE SEPARATE FROM OTHER CIRCUITS IN THE GARAGE. 2017 NEC, ART. 210.11 (C) (4).
O. LIGHTING OUTLETS SHALL BE INSTALLED WHERE SPECIFIED IN 210.70(A), (B), AND (C).
P. ALL RECESSED LIGHTS IN SHOWER/TUB AREAS TO BE SHOWER-RATED RECESSED CAN LIGHTS.
Q. ALL RECESSED CAN LIGHTS TO BE "AIR-TIGHT" & I.C. RATED WITH NO PENETRATIONS INSIDE THE RECESSED FIXTURE PER I.E.C.C 402.4.3 #1, 2 OR 3.
R. E4003.9 WET OR DAMP LOCATIONS.- LUMINAIRES INSTALLED IN WET OR DAMP LOCATIONS SHALL BE INSTALLED SO THAT WATER CANNOT ENTER OR ACCUMULATE IN WIRING COMPARTMENTS, LAMPHOLDERS OR OTHER ELECTRICAL PARTS. ALL LUMINAIRES INSTALLED IN WET LOCATIONS SHALL BE MARKED "SUITABLE FOR WET LOCATIONS." ALL LUMINAIRES INSTALLED IN DAMP LOCATIONS SHALL BE MARKED "SUITABLE FOR WET LOCATIONS" OR "SUITABLE FOR DAMP LOCATIONS."(IRC E410.10).
S. RECEPTACLES SHALL BE INSTALLED SO THAT NO POINT MEASURED HORIZONTALLY ALONG THE FLOOR LINE OF ANY WALL SPACE IS MORE THAN 6 FEET (1829 MM). (2018 IRC E3901.2.1) FROM A RECEPTACLE OUTLET. (2017 NEC 210.52(A)(1)).
T. HEATING, AIR-CONDITIONING, AND REFRIGERATION EQUIPMENT OUTLET SHALL BE INSTALLED AT AN ACCESSIBLE LOCATION FOR SERVICING OF EQUIPMENT AND AS PER 2017 NEC 210.63.
U. E3901.12 HVAC OUTLET.-A 125-VOLT, SINGLE-PHASE, 15- OR 20-AMPERE-RATED RECEPTACLE OUTLET SHALL BE INSTALLED AT AN ACCESSIBLE LOCATION FOR THE SERVICING OF HEATING, AIR-CONDITIONING AND REFRIGERATION EQUIPMENT. THE RECEPTACLE SHALL BE LOCATED ON THE SAME LEVEL AND WITHIN 25 FEET (7620 MM) OF THE HEATING, AIR-CONDITIONING AND REFRIGERATION EQUIPMENT. THE RECEPTACLE OUTLET SHALL NOT BE CONNECTED TO THE LOAD SIDE OF THE HVAC EQUIPMENT DISCONNECTING MEANS. (210.63) EXCEPTION: A RECEPTACLE OUTLET SHALL NOT BE REQUIRED FOR THE SERVICING OF EVAPORATIVE COOLERS. (210.63 EXCEPTION).
V. E3802.2 CABLES IN ACCESSIBLE ATTICS.- CABLES IN ATTICS OR ROOF SPACES PROVIDED WITH ACCESS SHALL BE INSTALLED AS SPECIFIED IN SECTIONS E3802.2.1 AND E3802.2.2. (320.3 AND 334.23).
  - V.A. E3802.2.1 ACROSS STRUCTURAL MEMBERS.-WHERE RUN ACROSS THE TOP OF FLOOR JOISTS, OR RUN WITHIN 7 FEET (2134 MM) OF FLOOR OR FLOOR JOISTS ACROSS THE FACE OF RAFTERS OR STUDDING, IN ATTICS AND ROOF SPACES THAT ARE PROVIDED WITH ACCESS, THE CABLE SHALL BE PROTECTED BY SUBSTANTIAL GUARD STRIPS THAT ARE AT LEAST AS HIGH AS THE CABLE. WHERE SUCH SPACES ARE NOT PROVIDED WITH ACCESS BY PERMANENT STAIRS OR LADDERS, PROTECTION SHALL ONLY BE REQUIRED WITHIN 6 FEET (1829 MM) OF THE NEAREST EDGE OF THE ATTIC ENTRANCE. [320.23(A) AND 334.23]
  - V.B. E3802.2.2 CABLE INSTALLED THROUGH OR PARALLEL TO FRAMING MEMBERS. WHERE CABLES ARE INSTALLED THROUGH OR PARALLEL TO THE SIDES OF RAFTERS, STUDS OR FLOOR JOISTS, GUARD STRIPS AND RUNNING BOARDS SHALL NOT BE REQUIRED, AND THE INSTALLATION SHALL COMPLY WITH TABLE E3802.1. [320.23(B) AND 334.23].
W. PROVIDE A BONDING CONDUCTOR-MINIMUM OF ON #4 COPPER WIRE CONNECTING THE BUILDERS WATER PIPING SYSTEM TO THE SERVICE EQUIPMENT ENCLOSURE GROUNDING BUSS [2017 NEC 250...].
X. AT LEAST ONE (1) 120-VOLT, 20-AMP BRANCH CIRCUIT SHALL BE INSTALLED TO SUPPLY RECEPTACLE OUTLETS IN ATTACHED GARAGES AND IN DETACHED GARAGES WITH ELECTRIC POWER. THIS CIRCUIT SHALL HAVE NO OTHER OUTLETS. (SEE IRC E3703.5). 2017 NEC 210.11(C)(4).
Y. PROVIDE ACCESS AND WORKING SPACE ABOUT ALL ELECTRICAL EQUIPMENT (INCLUDING DISCONNECTS) PER 2017 NEC 110.26 & 2018 IRC R3405.
Z. MEMBRANE PENETRATION SHALL COMPLY WITH SECTION R302.4.1. WHERE WALLS ARE REQUIRED TO HAVE A FIRE-RESISTANT RATING. RECESSED FIXTURES SHALL BE INSTALLED SO THAT THE REQUIRED FIRE-RESISTANCE RATING WILL NOT BE REDUCED.
AA. ALL EXTERIOR ELECTRICAL RECEPTACLES SHALL BE GROUND FAULT CIRCUIT PROTECTED AND MUST BE WATER PROOF.
AB. 200 AMP. SERVICE WITH METER; VERIFY LOCATION.
AC. VERIFY ALL CEILING LIGHT FIXTURES WITH MECHANICAL CONTRACTOR.
AD. ELECTRICAL CONTRACTOR TO PROVIDE REQUIRED DIRECT HOOK-UPS/CUT-OFFS, AND INSURE ALL VOLTAGES ARE COORDINATED WITH EQUIPMENT AND APPLIANCES, ALL ALL CIRCUITRY IS CORRECT AND ALL CODES AND ORDINANCES ARE MET. ELECTRICAL CONTRACTOR SHALL INSTALL ALL EQUIPMENT IN ACCORDANCE WITH MANUFACTURERS SPECIFICATIONS.
AE. HVAC CONTRACTOR TO VERIFY THERMOSTAT LOCATION.
AF. E3903.3 ADDITIONAL LOCATIONS. AT LEAST ONE WALL-SWITCH-CONTROLLED LIGHTING OUTLET SHALL BE INSTALLED IN HALLWAYS, STAIRWAYS, ATTACHED GARAGES, AND DETACHED GARAGES WITH ELECTRIC POWER. AT LEAST ONE WALL-SWITCH-CONTROLLED LIGHTING OUTLET SHALL BE INSTALLED TO PROVIDE ILLUMINATION ON THE EXTERIOR SIDE OF EACH OUTDOOR EGRESS DOOR HAVING GRADE LEVEL ACCESS, INCLUDING OUTDOOR EGRESS DOORS FOR ATTACHED GARAGES AND DETACHED GARAGES WITH ELECTRIC POWER. A VEHICLE DOOR IN A GARAGE SHALL NOT BE CONSIDERED AS AN OUTDOOR EGRESS DOOR.
AG. M1305.1.2.1 ELECTRICAL REQUIREMENTS. A LUMINARIES CONTROLLED BY A SWITCH LOCATED AT THE REQUIRED PASSAGEWAY OPENING AND A RECEPTACLE OUTLET SHALL BE INSTALLED AT OR NEAR THE APPLIANCE LOCATION IN ACCORDANCE WITH CHAPTER 39. EXPOSED LAMPS SHALL BE PROTECTED FROM DAMAGE BY LOCATION OR LAMP GUARDS.

THE INFORMATION CONTAINED ON THESE DRAWINGS SUCH AS DATA, DESIGNS, AND CONCEPTS, ARE PROPERTY OF PROCADESIGN LLC. AND SHALL NOT BE USED FOR ANY OTHER PURPOSE OTHER THAN ORIGINALLY INTENDED WITHOUT WRITTEN PERMISSION OF THE DESIGNER/CONSULTANT.

#	REVISIONS	DATE
1	CITY COMMENTS	12-21-22
2	CITY COMMENTS	05-20-23

DANCO RESIDENCE

4441 N JOKAKE DR SCOTTSDALE AZ 85251

172-29-017

DRAWN BY: ProCa Design
CONTACT #
www.procadesign.net
(602) 606-2885
angelica@procadesign.com

DATE: OCT. 2020

SCALE: PER PLAN

SHEET: E2

30624 STEPHEN E FOSTER 03-30-23 ARIZONA, U.S.A.
Expires 9-30-2023

aSf Consultants
Electrical Engineering
5140 West Trotter Trail
Phoenix, Arizona 85083
phone (602) 565-7720
e-mail: asfconsultants@yahoo.com

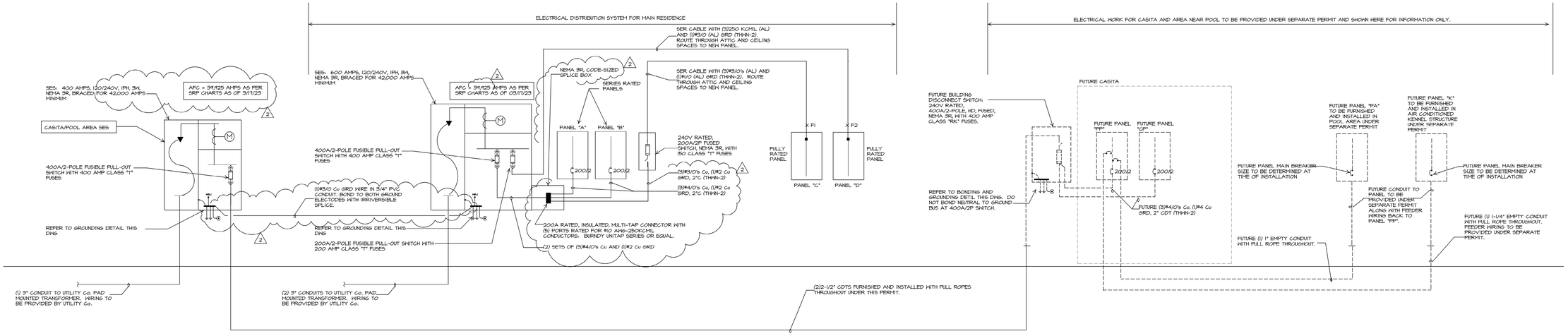

ONE-LINE DIAGRAM

NTS

AFC CALCULATIONS

FAULT #1		FAULT #2	
L =	125'	L =	125'
I =	34,425A	I =	34,425A
C =	4110	C =	12662
E (L-L) =	240V	E (L-L) =	240V
N =	1	N =	1
f =	$\frac{2 \times L \times I}{N \times C \times E(L\text{-}L)}$	f =	$\frac{2 \times L \times I}{N \times C \times E(L\text{-}L)}$
f =	4.565	f =	3.233
m =	$\frac{1}{1+f}$	m =	$\frac{1}{1+f}$
m =	0.179	m =	0.236
Isc =	I × m	Isc =	I × m
Isc =	7,174 AMPS AFC	Isc =	9,431 AMPS AFC

SES BONDING AND GROUNDING DETAIL

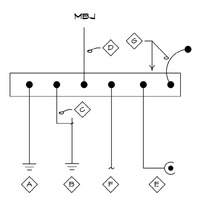

KEYED NOTES

- A) UFER (CONCRETE ENCASED ELECTRODE) 40'-0" IN LENGTH. (GROUNDING ELECTRODE #1) (OR BUILDING STEEL FOR XFMR's)
- B) 1/2" DIAMETER x 8'-0" LONG COPPER OR COPPER CLAD STEEL GROUND ROD. (GROUNDING ELECTRODE #2)
- C) GROUNDING ELECTRODE CONDUCTOR.
- D) FACTORY INTEGRATED BUS BAR MAIN BONDING JUMPER.
- E) METALLIC PIPING BOND WIRE. BOND TO ALL METALLIC PIPING SYSTEMS. (WATER, SPRINKLER, GAS, PNEUMATIC LINES, ETC.)
- F) BUILDING STEEL BOND WIRE (IF REQUIRED PER BUILDING CONSTRUCTION TYPE).
- G) FACTORY INTEGRATED AND BONDED BUS BAR/CASE BOND.

NEC REFERENCE	250.52(A)(3)	250.52(A)(3)	1.250.66	250.28 250.32(C)	250.104(A)	250.104(B)	250.112
SES AMPACITY	A	B	C	D	E	F	G
100 AMP	#4	5/8" x 8'	#4	#2	#4	#4	#2
200 AMP	#4	5/8" x 8'	#2	#2	#4	#4	#2
400 AMP	#4	5/8" x 8'	#1/0	#1/0	#1/0	#1/0	#1/0
600 AMP	#4	5/8" x 8'	#3/0	#3/0	#3/0	#3/0	#3/0
800 AMP	#4	5/8" x 8'	#3/0	#3/0	#3/0	#3/0	#3/0
1000 AMP	#4	5/8" x 8'	#3/0	#4/0	#3/0	#3/0	#4/0
1200 AMP	#4	5/8" x 8'	#3/0	#250	#3/0	#3/0	#250
1400 AMP	#4	5/8" x 8'	#3/0	#250	#3/0	#3/0	#250
1600 AMP	#4	5/8" x 8'	#3/0	#350	#3/0	#3/0	#350
1800 AMP	#4	5/8" x 8'	#3/0	#400	#3/0	#3/0	#400
2000 AMP	#4	5/8" x 8'	#3/0	#400	#3/0	#3/0	#400
2500 AMP	#4	5/8" x 8'	#3/0	#500	#3/0	#3/0	#500
3000 AMP	#4	5/8" x 8'	#3/0	#600	#3/0	#3/0	#600
3500 AMP	#4	5/8" x 8'	#3/0	#700	#3/0	#3/0	#700
3650 AMP	#4	5/8" x 8'	#3/0	#750	#3/0	#3/0	#750

400 AMP SES
600 AMP SES

ALL SIZES SHOWN ARE FOR COPPER CONDUCTORS.

GENERAL NOTES

1. THIS DETAIL IS PROVIDED IN ACCORDANCE WITH NATIONAL ELECTRICAL CODE ARTICLE 250.50.
2. THE GROUNDING ELECTRODE SYSTEM SHALL CONSIST OF ITEMS A, B, AND C.
3. ITEMS "E" AND "F" SHALL BE BONDED TOGETHER AND TO THE BUILDING GROUNDING ELECTRODE SYSTEM WHEN THEY ARE PRESENT.
4. ALL SPLICING SHALL BE ACCOMPLISHED VIA EXOTHERMIC WELD (CAD WELD).
5. NO VARIANCES FROM THIS DRAWING AND/OR SPECIFICATIONS ARE PERMITTED.
6. ALL INSTALLATIONS SHALL COMPLY WITH THE LATEST ADOPTED EDITION OF ARTICLE 250 (ALL SUBPARAGRAPHS) OF THE NATIONAL ELECTRICAL CODE AND ALL STATE AND LOCAL CODE REQUIREMENTS.
7. THE GROUNDING SYSTEM SHALL PROVIDE LESS THAN (25) OHMS OF RESISTANCE TO GROUND AT THE SERVICE CONNECTION. THE RESULTS OF THE TEST SHALL BE PROVIDED TO THE INSPECTING AGENCY VIA GROUND TEST (FALL-OF-POTENTIAL) AND SUBMITTED IN ACCORDANCE WITH THE ELECTRICAL SPECIFICATIONS CONTAINED HEREIN.

CITY OF PHOENIX
Planning and Development Department
By: KLA
(KEITH LANGLOIS)
05/08/2023

This set of plans has been reviewed for ELECTRICAL prior to issuance of Building Permit and shall be kept at the construction site. Such review shall not prevent the Building Official from requiring correction of errors in the plans where such errors are subsequently found to be in violation of any law or ordinance.

30624 STEPHEN E. FOSTER 03-20-23 ARIZONA, U.S.A.
Expires 9-30-2023
aSf Consultants
Electrical
Engineering
5140 West Trotter Trail
Phoenix, Arizona 85083
phone (602) 565-7720
e-mail: asfconsultants@yahoo.com

THE INFORMATION CONTAINED ON THESE DRAWINGS SUCH AS DATA, DESIGNS, AND CONCEPTS, ARE PROPERTY OF PROCADESIGN LLC. AND SHALL NOT BE USED FOR ANY OTHER PURPOSE OTHER THAN ORIGINALLY INTENDED WITHOUT WRITTEN PERMISSION OF THE DESIGNER/CONSULTANT.

#	REVISIONS	DATE
1	CITY COMMENTS	12-21-22
2	CITY COMMENTS	03-20-23

DANCO RESIDENCE

4441 N JOKAKE DR SCOTTSDALE AZ 85251

172-29-017

DRAWN BY:
ProCa Design
CONTACT #
www.procadesign.net
(602) 606-2885
angelica@procadesign.com

DATE: OCT. 2020

SCALE: PER PLAN

SHEET: E3

PANEL A LOAD SUMMARY
-

AREA OF RESIDENCE SERVED BY PANEL = 2075 SF

OTHER LOAD:

GENERAL LIGHTING & RECEPTACLES @ 3VA/SF	=	6225 VA
EXTERIOR LIGHTING/RECEPTACLES	=	7135 VA
APPLIANCE/COUNTER CIRCUITS @ 1500VA EA	=	4500 VA
DINING ROOM RECEPTACLES	=	1500 VA
STANDARD REFRIGERATOR/FREEZER	=	3000 VA
UNDERCOUNTER REFRIGERATORS	=	0 VA
REFRIGERATED DRAWER	=	0 VA
MICROWAVE DRAWER	=	0 VA
WARMING DRAWER @ 800 VA EA	=	0 VA
RANGE HOOD ONLY	=	0 VA
DISHWASHER	=	3000 VA
DISHWASHER/DISPOSAL	=	1920 VA
COOKTOP-GAS CONTROLS	=	0 VA
DOUBLE OVEN-ELEC	=	10000 VA
LAUNDRY CIRCUIT/WASHER	=	0 VA
DRYER-ELEC	=	0 VA
COMBO ELEC WASHER/DRYER	=	0 VA
GAS WATER HEATER AND PUMPS	=	312 VA
1-CAR GARAGE DOORS @ 865 VA EA	=	865 VA
2-CAR GARAGE DOORS @ 1200VA EA	=	0 VA
GARAGE RECEPTACLE CIRCUITS @ 1500VA EA	=	1500 VA
GARAGE LIGHTING	=	200 VA
OUTDOOR HEATED SPA @ 7500 VA EA	=	0 VA
STEAM SHOWER @ 11500 VA EA	=	0 VA
SAUNA	=	0 VA
EXERCISE EQUIPMENT	=	0 VA
SUB-TOTAL OTHER LOAD	=	40157 VA

OTHER LOAD DEMAND:

FIRST 10000 VA OF OTHER LOAD @ 100%	= 10000 VA	
REMAINDER OF OTHER LOAD @ 40%	= 12063 VA	
TOTAL DEMAND OF OTHER LOAD		= 22063 VA (1)

HVAC LOAD:

HP/CONDENSING UNITS	=	0 VA
AIR HANDLING UNITS	=	1224 VA
TOTAL HVAC LOAD		= 1224 VA (2)
EV CHARGER		= 20000 VA (3)
TOTAL LOAD: SUM OF (1)+(2)+(3)		= 43287 VA

43287 VA/240 V = 181 Amps

PANEL B LOAD SUMMARY
-

AREA OF RESIDENCE SERVED BY PANEL = 2050 SF

OTHER LOAD:

GENERAL LIGHTING & RECEPTACLES @ 3VA/SF	=	6150 VA
EXTERIOR LIGHTING/RECEPTACLES	=	3000 VA
APPLIANCE/COUNTER CIRCUITS @ 1500VA EA	=	1500 VA
DINING ROOM RECEPTACLES	=	0 VA
STANDARD REFRIGERATOR/FREEZER	=	0 VA
UNDERCOUNTER REFRIGERATORS	=	1920 VA
REFRIGERATED DRAWER	=	900 VA
MICROWAVE DRAWER	=	900 VA
WARMING DRAWER @ 800 VA EA	=	800 VA
RANGE HOOD ONLY	=	500 VA
DISHWASHER	=	0 VA
DISHWASHER/DISPOSAL	=	0 VA
COOKTOP-GAS CONTROLS	=	360 VA
DOUBLE OVEN-ELEC	=	0 VA
LAUNDRY CIRCUIT/WASHER	=	1500 VA
DRYER-ELEC	=	0 VA
COMBO ELEC WASHER/DRYER	=	5000 VA
GAS WATER HEATER AND PUMPS	=	0 VA
1-CAR GARAGE DOORS @ 865 VA EA	=	0 VA
2-CAR GARAGE DOORS @ 1200VA EA	=	0 VA
GARAGE RECEPTACLE CIRCUITS @ 1500VA EA	=	0 VA
GARAGE LIGHTING	=	0 VA
OUTDOOR HEATED SPA @ 7500 VA EA	=	0 VA
STEAM SHOWER @ 11500 VA EA	=	0 VA
SAUNA	=	0 VA
EXERCISE EQUIPMENT	=	0 VA
SUB-TOTAL OTHER LOAD	=	22530 VA

OTHER LOAD DEMAND:

FIRST 10000 VA OF OTHER LOAD @ 100%	= 10000 VA	
REMAINDER OF OTHER LOAD @ 40%	= 5012 VA	
TOTAL DEMAND OF OTHER LOAD		= 15012 VA (1)

HVAC LOAD:

HP/CONDENSING UNITS	= 21672 VA	
AIR HANDLING UNITS	= 3600 VA	
TOTAL HVAC LOAD		= 25272 VA (2)
EV CHARGER		= 0 VA (3)
TOTAL LOAD: SUM OF (1)+(2)+(3)		= 40284 VA

40284 VA/240 V = 168 Amps

PANEL C LOAD SUMMARY
-

AREA OF RESIDENCE SERVED BY PANEL = 2245 SF

OTHER LOAD:

GENERAL LIGHTING & RECEPTACLES @ 3VA/SF	=	6735 VA
EXTERIOR LIGHTING/RECEPTACLES	=	4500 VA
APPLIANCE/COUNTER CIRCUITS @ 1500VA EA	=	0 VA
DINING ROOM RECEPTACLES	=	0 VA
STANDARD REFRIGERATOR/FREEZER	=	0 VA
UNDERCOUNTER REFRIGERATORS	=	0 VA
REFRIGERATED DRAWER	=	0 VA
MICROWAVE DRAWER	=	0 VA
WARMING DRAWER @ 800 VA EA	=	0 VA
RANGE HOOD ONLY	=	0 VA
DISHWASHER	=	0 VA
DISHWASHER/DISPOSAL	=	0 VA
COOKTOP-GAS CONTROLS	=	0 VA
DOUBLE OVEN-ELEC	=	0 VA
LAUNDRY CIRCUIT/WASHER	=	3000 VA
DRYER-ELEC	=	5000 VA
COMBO ELEC WASHER/DRYER	=	0 VA
GAS WATER HEATER AND PUMPS	=	0 VA
INSTA-HOT WATER HEATER	=	2900 VA
1-CAR GARAGE DOORS @ 865 VA EA	=	0 VA
2-CAR GARAGE DOORS @ 1200VA EA	=	0 VA
GARAGE RECEPTACLE CIRCUITS @ 1500VA EA	=	0 VA
GARAGE LIGHTING	=	500 VA
OUTDOOR HEATED SPA @ 7500 VA EA	=	0 VA
STEAM SHOWER @ 11500 VA EA	=	0 VA
SAUNA	=	0 VA
EXERCISE EQUIPMENT	=	0 VA
SUB-TOTAL OTHER LOAD	=	22635 VA

OTHER LOAD DEMAND:

FIRST 10000 VA OF OTHER LOAD @ 100%	= 10000 VA	
REMAINDER OF OTHER LOAD @ 40%	= 5054 VA	
TOTAL DEMAND OF OTHER LOAD		= 15054 VA (1)

HVAC LOAD:

HP/CONDENSING UNITS	= 8208 VA	
AIR HANDLING UNITS	= 1800 VA	
TOTAL HVAC LOAD		= 10008 VA (2)
EV CHARGER		= 0 VA (3)
TOTAL LOAD: SUM OF (1)+(2)+(3)		= 25062 VA

25062 VA/240 V = 105 Amps

400A SPLICE LOAD SUMMARY (INCLUDES PANELS A, B, C)

AREA OF RESIDENCE SERVED BY PANEL = 6370 SF

OTHER LOAD:

GENERAL LIGHTING & RECEPTACLES @ 3VA/SF	=	19110 VA
EXTERIOR LIGHTING/RECEPTACLES	=	14635 VA
APPLIANCE/COUNTER CIRCUITS @ 1500VA EA	=	6000 VA
DINING ROOM RECEPTACLES	=	1500 VA
STANDARD REFRIGERATOR/FREEZER	=	3000 VA
UNDERCOUNTER REFRIGERATORS	=	1920 VA
REFRIGERATED DRAWER	=	900 VA
MICROWAVE DRAWER	=	900 VA
WARMING DRAWER @ 800 VA EA	=	800 VA
RANGE HOOD ONLY	=	500 VA
DISHWASHER	=	3000 VA
DISHWASHER/DISPOSAL	=	1920 VA
COOKTOP-GAS CONTROLS	=	360 VA
DOUBLE OVEN-ELEC	=	10000 VA
LAUNDRY CIRCUIT/WASHER	=	4500 VA
DRYER-ELEC	=	5000 VA
COMBO ELEC WASHER/DRYER	=	5000 VA
GAS WATER HEATER AND PUMPS	=	312 VA
1-CAR GARAGE DOORS @ 865 VA EA	=	865 VA
2-CAR GARAGE DOORS @ 1200VA EA	=	0 VA
GARAGE RECEPTACLE CIRCUITS @ 1500VA EA	=	1500 VA
GARAGE LIGHTING	=	700 VA
OUTDOOR HEATED SPA @ 7500 VA EA	=	0 VA
STEAM SHOWER @ 11500 VA EA	=	0 VA
SAUNA	=	0 VA
EXERCISE EQUIPMENT	=	0 VA
SUB-TOTAL OTHER LOAD	=	82422 VA

OTHER LOAD DEMAND:

FIRST 10000 VA OF OTHER LOAD @ 100%	= 10000 VA	
REMAINDER OF OTHER LOAD @ 40%	= 28969 VA	
TOTAL DEMAND OF OTHER LOAD		= 38969 VA (1)

HVAC LOAD:

HP/CONDENSING UNITS	= 29880 VA	
AIR HANDLING UNITS	= 6624 VA	
TOTAL HVAC LOAD		= 36504 VA (2)
EV CHARGER		= 20000 VA (3)
TOTAL LOAD: SUM OF (1)+(2)+(3)		= 95473 VA

95473 VA/240 V = 398 Amps

PANEL D LOAD SUMMARY
-

AREA OF RESIDENCE SERVED BY PANEL = 0 SF

OTHER LOAD:

GENERAL LIGHTING & RECEPTACLES @ 3VA/SF	=	0 VA
EXTERIOR LIGHTING/RECEPTACLES	=	0 VA
APPLIANCE/COUNTER CIRCUITS @ 1500VA EA	=	0 VA
DINING ROOM RECEPTACLES	=	0 VA
STANDARD REFRIGERATOR/FREEZER	=	0 VA
UNDERCOUNTER REFRIGERATORS	=	0 VA
REFRIGERATED DRAWER	=	0 VA
MICROWAVE DRAWER	=	0 VA
WARMING DRAWER @ 800 VA EA	=	0 VA
RANGE HOOD ONLY	=	0 VA
DISHWASHER	=	0 VA
DISHWASHER/DISPOSAL	=	0 VA
COOKTOP-GAS CONTROLS	=	0 VA
DOUBLE OVEN-ELEC	=	0 VA
LAUNDRY CIRCUIT/WASHER	=	0 VA
DRYER-ELEC	=	0 VA
COMBO ELEC WASHER/DRYER	=	0 VA
GAS WATER HEATER AND PUMPS	=	312 VA
1-CAR GARAGE DOORS @ 865 VA EA	=	0 VA
2-CAR GARAGE DOORS @ 1200VA EA	=	1200 VA
GARAGE RECEPTACLE CIRCUITS @ 1500VA EA	=	3000 VA
GARAGE LIGHTING	=	0 VA
OUTDOOR HEATED SPA @ 7500 VA EA	=	0 VA
STEAM SHOWER @ 11500 VA EA	=	0 VA
SAUNA	=	0 VA
EXERCISE EQUIPMENT	=	0 VA
LTG - FUTURE AT VOLLEYBALL & BASKETBALL COURTS	=	450 VA
SUB-TOTAL OTHER LOAD	=	4962 VA

OTHER LOAD DEMAND:

FIRST 10000 VA OF OTHER LOAD @ 100%	= 4962 VA	
REMAINDER OF OTHER LOAD @ 40%	= 0 VA	
TOTAL DEMAND OF OTHER LOAD		= 4962 VA (1)

HVAC LOAD:

HP/CONDENSING UNITS	= 0 VA	
AIR HANDLING UNITS	= 0 VA	
TOTAL HVAC LOAD		= 0 VA (2)
EV CHARGER		= 30000 VA (3)
TOTAL LOAD: SUM OF (1)+(2)+(3)		= 34962 VA

34962 VA/240 V = 146 Amps

SES 2 OF 2 LOAD SUMMARY (FUTURE casita TO BE PROVIDED UNDER SEPARATE PERMIT. INCLUDES FUTURE PANEL PP & CP LOADS)

AREA OF RESIDENCE SERVED BY PANEL = 1160 SF

OTHER LOAD:

GENERAL LIGHTING & RECEPTACLES @ 3VA/SF	=	3480 VA
EXTERIOR LIGHTING/RECEPTACLES	=	3000 VA
APPLIANCE/COUNTER CIRCUITS @ 1500VA EA	=	4500 VA
UNDERCOUNTER REFRIGERATORS	=	1800 VA
LAUNDRY CIRCUIT/WASHER	=	1500 VA
DRYER-ELEC	=	5000 VA
TANKLESS GAS WATER HEATER	=	360 VA
OUTDOOR HEATED SPA @ 7500 VA EA	=	7500 VA
STEAM SHOWER @ 11500 VA EA	=	11500 VA
SAUNA	=	11000 VA
EXERCISE EQUIPMENT	=	3000 VA
SUB-TOTAL OTHER LOAD	=	52640 VA

OTHER LOAD DEMAND:

FIRST 10000 VA OF OTHER LOAD @ 100%	= 10000 VA	
REMAINDER OF OTHER LOAD @ 40%	= 17056 VA	
TOTAL DEMAND OF OTHER LOAD		= 27056 VA (1)

HVAC LOAD:

HP/CONDENSING UNITS	= 6840 VA	
AIR HANDLING UNITS	= 1800 VA	
TOTAL HVAC LOAD		= 8640 VA (2)

POOL EQUIPMENT (PROJECTED LOADS)

PUMPS/FILTERS	= 10800 VA	
LIGHTING	= 1500 VA	
RECEPTACLES	= 1500 VA	
POOL HEATER	= 10000 VA	
TOTAL POOL EQUIPMENT LOAD		= 23800 VA (3)
PROJECTED AIR CONDITIONED KENNEL LOADS		= 5000 VA (4)
PROJECTED POOL AREA LOADS		= 5000 VA (5)
TOTAL LOAD: SUM OF (1)+(2)+(3)+(4)+(5)		= 69496 VA

69496 VA/240 V = 290 Amps

600A SES 1 OF 2 LOAD SUMMARY

AREA OF RESIDENCE SERVED BY PANEL = 6370 SF

OTHER LOAD:

GENERAL LIGHTING & RECEPTACLES @ 3VA/SF	=	19110 VA
EXTERIOR LIGHTING/RECEPTACLES	=	14635 VA
APPLIANCE/COUNTER CIRCUITS @ 1500VA EA	=	6000 VA
DINING ROOM RECEPTACLES	=	1500 VA
STANDARD REFRIGERATOR/FREEZER	=	3000 VA
UNDERCOUNTER REFRIGERATORS	=	1920 VA
REFRIGERATED DRAWER	=	900 VA
MICROWAVE DRAWER	=	900 VA
WARMING DRAWER @ 800 VA EA	=	800 VA
RANGE HOOD ONLY	=	500 VA
DISHWASHER	=	3000 VA
DISHWASHER/DISPOSAL	=	1920 VA
COOKTOP-GAS CONTROLS	=	360 VA
DOUBLE OVEN-ELEC	=	10000 VA
LAUNDRY CIRCUIT/WASHER	=	4500 VA
DRYER-ELEC	=	10000 VA
COMBO ELEC WASHER/DRYER	=	5000 VA
GAS WATER HEATER AND PUMPS	=	624 VA
INSTA-HOT WATER HEATER	=	2900 VA
1-CAR GARAGE DOORS @ 865 VA EA	=	865 VA
2-CAR GARAGE DOORS @ 1200VA EA	=	1200 VA
GARAGE RECEPTACLE CIRCUITS @ 1500VA EA	=	4500 VA
GARAGE LIGHTING	=	700 VA
OUTDOOR HEATED SPA @ 7500 VA EA	=	0 VA
STEAM SHOWER @ 11500 VA EA	=	0 VA
SAUNA	=	0 VA
EXERCISE EQUIPMENT	=	0 VA
SUB-TOTAL OTHER LOAD	=	94834 VA

OTHER LOAD DEMAND:

FIRST 10000 VA OF OTHER LOAD @ 100%	= 10000 VA	
REMAINDER OF OTHER LOAD @ 40%	= 33934 VA	
TOTAL DEMAND OF OTHER LOAD		= 43934 VA (1)

HVAC LOAD:

HP/CONDENSING UNITS	= 29880 VA	
AIR HANDLING UNITS	= 6624 VA	
TOTAL HVAC LOAD		= 36504 VA (2)
EV CHARGER		= 48000 VA (3)
TOTAL LOAD: SUM OF (1)+(2)+(3)		= 128438 VA

128438 VA/240 V = 535 Amps

2

1

CITY OF PHOENIX
Planning and Development Department
By: KLA
(KEITH LANGLOIS)
05/08/2023

This set of plans has been reviewed for ELECTRICAL prior to issuance of Building Permit and shall be kept at the construction site. Such review shall not prevent the Building Official from requiring correction of errors in the plans where such errors are subsequently found to be in violation of any law or ordinance.

THE INFORMATION CONTAINED ON THESE DRAWINGS SUCH AS DATA, DESIGNS, AND CONCEPTS, ARE PROPERTY OF PROCADESIGN LLC. AND SHALL NOT BE USED FOR ANY OTHER PURPOSE OTHER THAN ORIGINALLY INTENDED WITHOUT WRITTEN PERMISSION OF THE DESIGNER/CONSULTANT.

#	REVISIONS	DATE
1	CITY COMMENTS	12-21-22
2	CITY COMMENTS	03-20-23

DANCO RESIDENCE
4441 N JOKAKE DR SCOTTSDALE AZ 85251
172-29-017

PROFESSIONAL ENGINEER (ELECTRICAL) 32664 STEPHEN E. FOSTER 03-20-23 ARIZONA, U.S.A.
Expires 9-30-2023
aSf Consultants
Electrical
Engineering
5140 West Trotter Trail
Phoenix, Arizona 85083
phone (602) 565-7720
e-mail: asfconsultants@yahoo.com

DRAWN BY:
ProCa Design
CONTACT #
www.procadesign.net
(602) 606-2885
angelica@procadesign.com

DATE:
OCT. 2020
SCALE:
PER PLAN
SHEET:
E4

CITY OF PHOENIX
Planning and Development Department
By: KLA
(KEITH LANGLOIS)
05/08/2023

This set of plans has been reviewed for ELECTRICAL prior to issuance of Building Permit and shall be kept at the construction site. Such review shall not prevent the Building Official from requiring correction of errors in the plans where such errors are subsequently found to be in violation of any law or ordinance.

PANELBOARD SCHEDULE "A"

■ NEW ___ EXISTING

VOLTAGE: ■ 120/240V I PHASE 3 WIRE — BUS AMPS: ■ 200 ___ 400 ___ 600

TYPE: ___ PANELBOARD ■ LOAD CENTER — CIRCUIT BREAKER: ___ BOLT-ON ■ PLUG-ON — NEMA ENCLOSURE: NEMA ___ I ■ 3R

BUSSING: ___ COPPER ■ ALUMINUM — MOUNTING: ■ SURFACE ___ FLUSH — FEED THRU: ___ YES ■ NO

ISOLATED GROUND BUS: ___ YES ■ NO — 200% NEUTRAL BUS: ___ YES ■ NO — MAINS: ■ CIRCUIT BREAKER ___ LUG ONLY

CIRCUIT BREAKER BRACING: 42K/10K AIC — ■ SERIES RATED ___ FULLY RATED
___ 2 TIER — ___ BREAKER/BREAKER ■ FUSE/BREAKER — CLASS "K" FUSE SERIES RATING

USE/AREA SERVED	C/B	C/B NO.	WATTS A	WATTS B	C/B NO.	C/B	USE/AREA SERVED	
BHH-2, CP-2, CONDENSATE PUMP	15	1	-	-	2	20	ONE-CAR GARAGE DOOR	AG
SEASONAL LTG RECEPTS #1	15	3		-	4	20	ONE-CAR GARAGE GFCI RECEPTS	#
SEASONAL LTG RECEPTS #2	15	5	-		6	20	1/2 BATH GFCI RECEPT	#
SEASONAL LTG RECEPTS #3	15	7		-	8	20	RECEPT - DINING	#
SEASONAL LTG RECEPTS #4	15	9	-		10	20	REFRIGERATOR	AG
LTG - GARAGE, STOR, 1/2 BATH, MECH RM	15	11		-	12	20	KITCHEN APPLIANCE CKT #1	#
LTG - FRONT PORCH, GARAGE ENTRY	15	13	-		14	20	KITCHEN APPLIANCE CKT #2	#
LTG - FOYER	15	15		-	16	20	KITCHEN ISLAND APPLIANCE CKT	#
LTG - MUD RM, PANTRY	15	17	-		18	20	DISHWASHER #1	AG
RECEPT - FOYER	15	19		-	20	20	DISPOSAL/DISHWASHER #2	AG
RECEPT - MUDRM	15	21	-		22	20	COVERED PATIO RECEPTS	#
RECEPT - FRONT PORCH	15	23		-	24	20	RECEPTS - MECH RM AND EXTERIOR	#
RECEPT - LIVING RM	15	25	-		26	50	DOUBLE WALL OVEN	
LTG - DINING, KITCHEN	15	27		-	28			
LTG - DINING, KITCHEN	15	29	-		30	20	PANTRY DISHWASHER	AG
LTG - COVERED PATIO	15	31		-	32	20	PANTRY REFRIGERATOR	AG
RECEPT - MUDRM COUNTER	20	33	-		34	20	ECC-1	
BUSSED SPACE	-	35		-	36	2		
AHU-4	15	37	-		38	60	ECC-2	
		39		-	40			
TOTAL LOAD PER PHASE			X	X	X VA / - V =		__AMPERES	

REFER TO LOAD SUMMARY

PANELBOARD SCHEDULE "B"

■ NEW ___ EXISTING

VOLTAGE: ■ 120/240V I PHASE 3 WIRE — BUS AMPS: ■ 200 ___ 400 ___ 600

TYPE: ___ PANELBOARD ■ LOAD CENTER — CIRCUIT BREAKER: ___ BOLT-ON ■ PLUG-ON — NEMA ENCLOSURE: NEMA ___ I ■ 3R

BUSSING: ___ COPPER ■ ALUMINUM — MOUNTING: ■ SURFACE ___ FLUSH — FEED THRU: ___ YES ■ NO

ISOLATED GROUND BUS: ___ YES ■ NO — 200% NEUTRAL BUS: ___ YES ■ NO — MAINS: ■ CIRCUIT BREAKER ___ LUG ONLY

CIRCUIT BREAKER BRACING: 42K/10K AIC — ■ SERIES RATED ___ FULLY RATED
___ 2 TIER — ___ BREAKER/BREAKER ■ FUSE/BREAKER — CLASS "K" FUSE SERIES RATING

USE/AREA SERVED	C/B	C/B NO.	WATTS A	WATTS B	C/B NO.	C/B	USE/AREA SERVED	
LTG - FAMILY RM	15	1	-		2	20	BAR - APPLIANCE CKT	#
LTG - BAR, GAME RM	15	3		-	4	20	BAR - UNDRCNTR REFRIG, ICE MAKER	AG
RECEPTS - FAMILY RM	15	5	-		6	20	MASTR BATH GFCI RECEPT #1	#
RECEPTS - GAME RM	15	7		-	8	20	MASTR BATH GFCI RECEPT #2	#
RECEPTS - BAR GENERAL	15	9	-		10	20	LAUNDRY RECEPTS MSTR REC	#
LTG/FAN - GAME RM, CLOSET	15	11		-	12	50	COMBO WASHER/DRYER MSTR REC	
LTG - MSTR CLOSET, HALL, MSTR BATH	15	13	-		14			
DETECTORS - SMOKE, CO	15	15			16	20	EXTERIOR RECEPTS, RECEPTS AT G/a	#
RECEPTS - MSTR BEDRM #1	15	17	-		18	20	COVERED PATIO RECEPTS	#
RECEPTS - MSTR BEDRM #2	15	19		-	20	20	RECEPTS - GAME RM CLOSET, COND PUMP	#
GAS RANGE/OVEN CONTROLS	15	21	-		22	20	HOOD	#
BUSSED SPACE	-	23		-	24	20	MICROWAVE DRAWER	AG
BUSSED SPACE	-	25	-		26	20	WARMING DRAWER	AG
BUSSED SPACE	-	27		-	28	20	REFRIG DRAWER	AG
BUSSED SPACE	-	29	-		30	50	GU-1	
BUSSED SPACE	-	31		-	32	2		
AHU-3	15	33	-		34	40	GU-3	
		35		-	36	2		
AHU-1	15	37	-		38	40	GU-4	
		39		-	40	2		
TOTAL LOAD PER PHASE			X	X	X VA / - V =		__AMPERES	

REFER TO LOAD SUMMARY

PANELBOARD SCHEDULE "C"

■ NEW ___ EXISTING

VOLTAGE: ■ 120/240V I PHASE 3 WIRE — BUS AMPS: ■ 200 ___ 400 ___ 600

TYPE: ___ PANELBOARD ■ LOAD CENTER — CIRCUIT BREAKER: ___ BOLT-ON ■ PLUG-ON — NEMA ENCLOSURE: NEMA ■ I ___ 3R

BUSSING: ___ COPPER ■ ALUMINUM — MOUNTING: ___ SURFACE ■ FLUSH — FEED THRU: ___ YES ■ NO

ISOLATED GROUND BUS: ___ YES ■ NO — 200% NEUTRAL BUS: ___ YES ■ NO — MAINS: ___ CIRCUIT BREAKER ■ LUG ONLY

CIRCUIT BREAKER BRACING: 10,000 AIC — ___ SERIES RATED ■ FULLY RATED
___ 2 TIER — ___ BREAKER/BREAKER ___ FUSE/BREAKER — CLASS "K" FUSE SERIES RATING

USE/AREA SERVED	C/B	C/B NO.	WATTS A	WATTS B	C/B NO.	C/B	USE/AREA SERVED	
LTG/FAN - BEDRM 2, BATH, REC	15	1	-		2	20	BEDRM 2 BATH GFCI RECEPT	#
LTG - AUTO SECURITY	15	3		-	4	20	BEDRM 3 BATH GFCI RECEPT	#
LTG - HALL	15	5	-		6	20	BEDRM 4 BATH GFCI RECEPT	#
LTG - EXTERIOR, GARAGE ENTRY	15	7		-	8	20	BEDRM 5 BATH GFCI RECEPT	#
LTG/FAN - BEDRM 3, BATH, REC	15	9	-		10	20	WASHER	AG
LTG/FAN - BEDRM 4, BATH, REC	15	11		-	12	30	DRYER	
LTG/FAN - BEDRM 5, BATH, REC	15	13	-		14			
LTG - PATIO	15	15			16	20	LAUNDRY RM RECEPTS	#
LTG - GARAGE, ATTIC	15	17	-		18	20	PATIO RECEPTS	#
RECEPT - HALL	15	19		-	20	15	LTG - LAUNDRY	#
RECEPT - BEDRM 2	15	21	-		22	-	BUSSED SPACE	
RECEPT - BEDRM 3	15	23		-	24	-	BUSSED SPACE	
RECEPT - BEDRM 4	15	25	-		26	-	BUSSED SPACE	
RECEPT - BEDRM 5	15	27		-	28	-	BUSSED SPACE	
DETECTORS - SMOKE, CO	15	29	-		30	-	BUSSED SPACE	
EXTERIOR RECEPTS	20	31		-	32	-	BUSSED SPACE	
AHU-2	15	33	-		34	-	BUSSED SPACE	
		35		-	36	-	BUSSED SPACE	
GU-2	2 50	37	-		38	15	BHH-3	
		39		-	40			
TOTAL LOAD PER PHASE			X	X	X VA / - V =		__AMPERES	

REFER TO LOAD SUMMARY

PANELBOARD SCHEDULE "D"

■ NEW ___ EXISTING

VOLTAGE: ■ 120/240V I PHASE 3 WIRE — BUS AMPS: ___100 ■ 200 ___ 400

TYPE: ___ PANELBOARD ■ LOAD CENTER — CIRCUIT BREAKER: ___ BOLT-ON ■ PLUG-ON — NEMA ENCLOSURE: NEMA ■ I ___ 3R

BUSSING: ___ COPPER ■ ALUMINUM — MOUNTING: ___ SURFACE ■ FLUSH — FEED THRU: ___ YES ■ NO

ISOLATED GROUND BUS: ___ YES ■ NO — 200% NEUTRAL BUS: ___ YES ■ NO — MAINS: ___ CIRCUIT BREAKER ■ LUG ONLY

CIRCUIT BREAKER BRACING: 10,000 AIC — ___ SERIES RATED ■ FULLY RATED
___ 2 TIER — ___ BREAKER/BREAKER ___ FUSE/BREAKER — CLASS "K" FUSE SERIES RATING

USE/AREA SERVED	C/B	C/B NO.	WATTS A	WATTS B	C/B NO.	C/B	USE/AREA SERVED	
ECC-1	60	1	-		2	60	ECC-2	
		3		-	4	2		
ECC-3	60	5	-		6	60	GARAGE GFCI RECEPTS #1	#
		7		-	8	20	GARAGE GFCI RECEPTS #2	#
GARAGE DOOR	20	9	-		10	15	BHH-1, CP-1	
VOLLEYBALL COURT FUTURE LTG	20	11		-	12	-	BUSSED SPACE	
BASKETBALL COURT FUTURE LTG	20	13	-		14	-	BUSSED SPACE	
BUSSED SPACE	-	15		-	16	-	BUSSED SPACE	
BUSSED SPACE	-	17	-		18	-	BUSSED SPACE	
BUSSED SPACE	-	19		-	20	-	BUSSED SPACE	
BUSSED SPACE	-	21	-		22	-	BUSSED SPACE	
BUSSED SPACE	-	23		-	24	-	BUSSED SPACE	
BUSSED SPACE	-	25	-		26	-	BUSSED SPACE	
BUSSED SPACE	-	27		-	28	-	BUSSED SPACE	
BUSSED SPACE	-	29	-		30	-	BUSSED SPACE	
TOTAL LOAD PER PHASE			X	X	X VA / - V =		__AMPERES	

PANEL SYMBOL LIST

#	ARC FAULT CIRCUIT INTERRUPTER BREAKER (AFCI)
AG	COMBINATION ARC FAULT CIRCUIT INTERRUPTER BREAKER (AFCI) AND GROUND FAULT CIRCUIT INTERRUPTING BREAKER
	EXIST BREAKER WITH EXIST LOAD TO REMAIN AS IS
D	EXISTING BREAKER WITH NEW LOAD
GP	EXIST BREAKER WITH NO CONNECTED LOAD
GF	GROUND FAULT CIRCUIT INTERRUPTER BREAKER (GFCI)
●	NEW BREAKER WITH NEW LOAD
LO	PROVIDE BREAKER WITH HANDLE "LOCK-OFF" DEVICE
	PROVIDE BREAKER WITH HANDLE "LOCK-ON" DEVICE
◇	PROVIDE HANDLE TIES OR MULTI-POLE BREAKER FOR SYSTEM FURNITURE FEED (PER NEC 605.7.)
SD	SHUNT TRIP CIRCUIT BREAKER
✳	LIGHTING LOAD CALCULATED AT 125%
L	LARGEST MECHANICAL EQUIPMENT CALCULATED AT 125%
K	KITCHEN EQUIPMENT AT 65% PER NEC 220.56
S	STORAGE TANK WATER HEATER CALCULATED AT 125%
T	CIRCUIT VIA TIMECLOCK (AND CONTACTOR IF NEEDED)
CON	CIRCUIT VIA CONTACTOR.
PC	CIRCUIT VIA PHOTOCELL AND CONTACTOR (IF NEEDED)
F	FIRE ALARM OR SPRINKLER MONITOR CONTROL CIRCUIT. PROVIDE RED CIRCUIT BREAKER IDENTIFICATION PLACECARD
E	ROUTE NOMBRIN TO PANEL VIA RELAY CONTACT IN EXISTING/NEW LIGHTING CONTROL PANEL.
EM	CIRCUIT CONTAINS EMERGENCY LIGHTING END UNIT EQUIPMENT. CONTACTOR SHALL LABLE CIRCUIT DIRECTORY AS SUCH. (NEC 700.12)

THE INFORMATION CONTAINED ON THESE DRAWINGS SUCH AS DATA, DESIGNS, AND CONCEPTS, ARE PROPERTY OF PROCADESIGN LLC. AND SHALL NOT BE USED FOR ANY OTHER PURPOSE OTHER THAN ORIGINALLY INTENDED WITHOUT WRITTEN PERMISSION OF THE DESIGNER/CONSULTANT.

#	REVISIONS	DATE
1	CITY COMMENTS	12-21-22
2	CITY COMMENTS	03-20-23

DANCO RESIDENCE
4441 N JOKAKE DR SCOTTSDALE AZ 85251
172-29-017

30824 STEPHEN E. FOSTER 03-20-23 ARIZONA, U.S.A.
Expires 9-30-2023
aSf Consultants
Electrical
Engineering
5140 West Trotter Trail
Phoenix, Arizona 85083
phone (602) 565-7720
e-mail: asfconsultants@yahoo.com

DRAWN BY:
ProCa Design
CONTACT #
www.procadesign.net
(602) 606-2885
angelica@procadesign.com

DATE:
OCT. 2020
SCALE:
PER PLAN
SHEET:
E5

CITY OF PHOENIX
Planning and Development Department
By: KLA
(KEITH LANGLOIS)
05/08/2023

This set of plans has been reviewed for ELECTRICAL prior to issuance of Building Permit and shall be kept at the construction site. Such review shall not prevent the Building Official from requiring correction of errors in the plans where such errors are subsequently found to be in violation of any law or ordinance.

ELECTRICAL SITE PLAN

SCALE: 1" = 10'-0"

THE INFORMATION CONTAINED ON THESE DRAWINGS SUCH AS DATA, DESIGNS, AND CONCEPTS, ARE PROPERTY OF PROCADESIGN LLC. AND SHALL NOT BE USED FOR ANY OTHER PURPOSE OTHER THAN ORIGINALLY INTENDED WITHOUT WRITTEN PERMISSION OF THE DESIGNER/CONSULTANT.

#	REVISIONS	DATE
1	CITY COMMENTS	12-21-22
2	CITY COMMENTS	05-20-23

DANCO RESIDENCE

4441 N JOKAKE DR SCOTTSDALE AZ 85251

172-29-017

DRAWN BY: ProCa Design

CONTACT #
www.procadesign.net
(602) 606-2885
angelica@procadesign.com

DATE: OCT. 2020

SCALE: PER PLAN

SHEET: E6

30824 STEPHEN E. FOSTER 03-20 ARIZONA, U.S.A.

Expires 9-30-2023

aSf Consultants
Electrical Engineering
5140 West Trotter Trail
Phoenix, Arizona 85083
phone (602) 565-7720
e-mail: asfconsultants@yahoo.com

SPECIFICATIONS

GENERAL

1. THE CONTRACTOR SHALL PROVIDE THE WORK SHOWN ON THE DRAWINGS AND SPECIFIED FOR THEIR INDIVIDUAL SECTIONS OF WORK. THE WORD "WORK" SHALL MEAN ALL LABOR, TRANSPORTATION, MATERIAL, EQUIPMENT, TOOLS, INSTALLATION, SUPERVISION, AND ANY OTHER INCIDENTAL ITEMS OR SERVICES OBVIOUSLY NECESSARY FOR THE PROPER INSTALLATION AND OPERATION OF THE COMPLETE SYSTEMS, WHICH SHALL BE PROVIDED WHETHER OR NOT SPECIFICALLY MENTIONED OR SHOWN.

2. ALL GENERAL CONDITIONS, SPECIAL REQUIREMENTS OR GENERAL REQUIREMENTS OF THE GENERAL CONSTRUCTION SPECIFICATION ARE PART OF THIS SPECIFICATION AND HAVE THE SAME FORCE AND EFFECT AS IF PRINTED HERE IN FULL.

3. THE WORD "PROVIDE" SHALL MEAN FURNISH AND INSTALL, MAKE ALL FINAL CONNECTIONS, AND LEAVE IN AN APPROVED OPERATING CONDITION.

4. ALL WORK SHALL BE DONE IN ACCORDANCE WITH THE LATEST ADOPTED EDITION OF THE APPLICABLE BUILDING, MECHANICAL, PLUMBING, AND ELECTRICAL CODES, AND FEDERAL, STATE, AND LOCAL REGULATIONS.

5. THE CONTRACTOR SHALL BE RESPONSIBLE FOR THE FOLLOWING: WORKMEN'S IDENTIFICATION AND SAFETY, FIRE PROTECTION, CONTRACTOR'S LIABILITY INSURANCE, SAFETY BARRICADES, WARNING SIGNS, AND TRASH REMOVAL.

6. THE CONTRACTOR SHALL BE RESPONSIBLE FOR PAYING ALL FEES AND OBTAINING ALL PERMITS AND INSPECTIONS REQUIRED FOR THE WORK.

7. THE CONTRACTOR SHALL CAREFULLY EXAMINE ALL DRAWINGS FOR THE BUILDING, AND FOR OTHER TRADES, AND SHALL COORDINATE THE WORK WITH ALL OTHER TRADES, INCLUDING, BUT NOT LIMITED TO, THE CONSTRUCTION DOCUMENTS, SHOP DRAWINGS, ETC. FOR ALL GENERAL CONSTRUCTION, STRUCTURAL, MECHANICAL, AND ELECTRICAL AND SPECIALTY CONTRACTOR WORK. THE CONTRACTOR SHALL BE RESPONSIBLE FOR THE PROPER FITTING OF MATERIAL INTO THE BUILDING AS PLANNED, WITHOUT INTERFERENCE WITH OTHER WORK, AND SHALL MAKE REASONABLE MODIFICATIONS IN THE LAYOUT AS NEEDED
TO PREVENT CONFLICT WITH OTHER TRADES, TO PROVIDE ACCESS AND FOR THE PROPER EXECUTION OF THE WORK.

8. DRAWINGS ARE DIAGRAMMATIC, SMALL SCALE, AND INDICATE THE GENERAL ARRANGEMENT OF SYSTEMS AND WORK INCLUDED. CERTAIN COMPONENTS, APPURTENANCES, AND RELATED SPECIALTIES ARE NOT SHOWN, AND SHALL BE PROVIDED. IT IS THE INTENT OF THE DRAWING AND SPECIFICATIONS TO CALL FOR FINISHED WORK, TESTED AND READY FOR OPERATION. DO NOT SCALE DRAWINGS. ARRANGEMENT OF EQUIPMENT AND ROUTING OF PIPES AND DUCTWORK, ETC. INDICATED ON DRAWINGS MAY REQUIRE MODIFICATION DUE TO UNFORESEEN CONDITIONS AND REQUIRED ON SITE REVISIONS DURING CONSTRUCTION. (SEE ALSO "BIDDING")

9. ALL WORK REQUIRED FOR IDENTICAL ITEMS SHOWN ON THE DRAWINGS SHALL BE PROVIDED ALTHOUGH EACH SPECIFIC IDENTICAL ITEM MAY NOT BE SHOWN IN DETAIL- OR CALLED OUT.

10. THE CONTRACTOR SHALL PROVIDE (5) COPIES OF SUBMITTALS AT ONE TIME, BOUND IN A NEAT & ORDERLY MANNER. PARTIAL OR UNMARKED SUBMITTALS WILL NOT BE ACCEPTED. SUBMITTALS SHALL INCLUDE ALL EQUIPMENT, MATERIALS, AND DEVICES FOR REVIEW BY THE ENGINEER. WORK SHALL NOT START UNTIL ALL REVIEWS HAVE BEEN COMPLETED AND THE ITEMS TO BE PROVIDED ARE ACCEPTABLE. ALL MATERIALS AND EQUIPMENT SHALL BE COMMONLY USED ACCEPTABLE GRADES IN THE CONSTRUCTION INDUSTRY AND SHALL BEAR THE "U.L.", ASME, AMCA, OR OTHER LABEL WHEN APPLICABLE.

11. UPON COMPLETION OF CONSTRUCTION, THE CONTRACTOR SHALL SUPPLY THE ARCHITECT WITH COMPLETE SETS OF AS-BUILT DOCUMENTS ACCURATELY SHOWING THE MATERIALS AND EQUIPMENT AS INSTALLED.

12. ALL MATERIALS AND WORKMANSHIP TO BE GUARANTEED FOR A MINIMUM OF ONE YEAR FROM DATE OF ACCEPTANCE BY OWNER. REFRIGERATION COMPRESSORS SHALL BE GUARANTEED FOR A MINIMUM OF FIVE YEARS FROM DATE OF OWNER'S ACCEPTANCE. IN ADDITION, THE CONTRACTOR SHALL GUARANTEE THAT THE INSTALLATION, WHEN OPERATED IN ACCORDANCE WITH THE CONTRACTOR'S INSTRUCTIONS, WILL DEVELOP CAPACITY AND CHARACTERISTICS INDICATED OR SPECIFIED AND WILL FULFILL EACH AND EVERY REQUIREMENT OF THE DRAWINGS AND SPECIFICATIONS, AND SHOULD THE INSTALLATION IN ANY WAY FAIL TO DO SO, THE CONTRACTOR WILL, WITHOUT DELAY AND WITHOUT COST TO THE OWNER, PROVIDE WHATEVER ADDITIONAL EQUIPMENT, MATERIAL, AND LABOR IS NECESSARY TO CORRECT THE FAULT AND COMPLY WITH THE REQUIREMENTS OF THE DRAWINGS AND SPECIFICATIONS.

13. CONTRACTOR SHALL CHECK AND VERIFY ALL SIZES, DIMENSIONS, AND CONDITIONS BEFORE STARTING ANY WORK. ANY DEVIATIONS OR PROBLEMS SHALL BE TRANSMITTED TO THE ENGINEER FOR REVIEW.

14. PROVIDE BASE AND COUNTER FLASHING FOR ITEMS PENETRATING THE ROOF- COORDINATE WITH ARCHITECTURAL REQUIREMENTS.

15. CONTRACTOR TO FURNISH AND INSTALL ALL STARTERS, WIRING, CONTROLS, DEVICES AND ALL CONDUIT, FOR A COMPLETE AND OPERABLE SYSTEM.

16. ALL WORK SHOWN IS NEW, UNLESS NOTED AS EXISTING.

17. MAINTAIN OCCUPANCY AND FIREWALL SEPARATION INTEGRITY AS REQUIRED. REFER TO ARCHITECTURAL PLANS FOR LOCATIONS OF ALL OCCUPANCY/FIREWALL SEPARATIONS AND SPECIFIC DETAILS FOR CONSTRUCTION. PROVIDE ALL NECESSARY FIRE DAMPERS, ACCESS DOORS, AND CAULKING, ETC. FOR APPROVED INSTALLATION.

1. BIDDING

SUBMISSION OF A BID PROPOSAL, DIRECTLY OR INDIRECTLY BY THE CONTRACTOR FOR THIS WORK, SHALL IMPLY THAT THE BIDDER HAS EXAMINED THE JOB SITE AND UNDERSTANDS THE CONDITIONS THAT MAY AFFECT THE PERFORMANCE OF THE WORK. CONTRACTOR IS EXPECTED TO CONTACT ARCHITECT FOR ANY PARTICULAR PROBLEMS AND CLEAR UP ANY POSSIBLE MISUNDERSTANDING BEFORE BID IS SUBMITTED. NO CONSIDERATION OR ALLOWANCE WILL BE GRANTED FOR ANY ALLEGED MISUNDERSTANDING OF THE CONTRACT DOCUMENTS AND THE WORK TO BE ACCOMPLISHED.

2. BASE PROPOSAL ON MANUFACTURERS NAMED, UNLESS "OR EQUAL" IS INDICATED.

EXECUTION

1. THE CONTRACTOR SHALL PROVIDE ALL SLEEVES, OPENINGS, CUTTING, AND PATCHING NECESSARY FOR THE INSTALLATION OF THE WORK. CUTTING AND PATCHING SHALL BE DONE BY WORKMEN SKILLED IN THE TRADES REQUIRED AND PAID BY THE CONTRACTOR REQUIRING THE WORK COMPLETE.

2. THE CONTRACTOR SHALL PROVIDE ALL RIGGING, HANDLING OF MATERIALS AND EQUIPMENT, AND THE NECESSARY PROTECTION FOR MATERIALS AND EQUIPMENT.

3. TOOLS AND EQUIPMENT WILL BE STORED IN OWNER DESIGNATED AREAS ONLY.

4. THE CONTRACTOR WILL PROTECT THE WORK AND MATERIAL AGAINST DIRT, THEFT, INJURY, OR DAMAGE UNTIL ACCEPTED BY OWNER. ALL WORK SHALL BE TURNED OVER TO OWNER CLEAN AND IN PERFECT CONDITION, READY FOR SATISFACTORY SERVICE.

5. PIPES AND/OR CONDUITS PASSING THROUGH WALL, FLOORS, AND PARTITIONS SHALL BE PROVIDED WITH SLEEVES, EXCEPT AS PROHIBITED BY U.L. LISTING. SLEEVES PASSING THROUGH WATER PROOFING OR DAMP PROOFING SHALL BE WATER TIGHT. PENETRATIONS THROUGH FIRE RATED CONSTRUCTION SHALL BE FIRE PROOFED WITH MATERIAL APPROVED AND AS DEFINED FOR THE RATING OF THE STRUCTURE AND U.L. LISTED.

6. EACH CONTRACTOR SHALL PROVIDE ALL FOUNDATIONS, HANGERS, AND SUPPORTS FOR ALL EQUIPMENT SUPPLIED AND/OR INSTALLED UNDER THEIR WORK. ANY EQUIPMENT WITH MOVING PARTS SHALL BE PROVIDED WITH VIBRATION ISOLATION.

7. ALL EQUIPMENT SHALL BE PROVIDED WITH FACTORY FINISH. ALL REQUIRED PAINTING WILL BE PERFORMED UNDER THE GENERAL CONSTRUCTION SECTION OF THE SPECIFICATIONS

8. WHERE PIPES OR CONDUITS PASS THROUGH WALLS, FLOORS, OR CEILINGS IN FINISHED AREAS, THEY SHALL BE FURNISHED WITH CHROME PLATED ESCUTCHEON PLATES.

9. AT THE CONCLUSION OF THE JOB, EACH PIECE OF EQUIPMENT, VALVE, SWITCH, STARTER, PANEL, PIPE LINE, CONDUIT, ETC., SHALL BE CLEARLY IDENTIFIED WHETHER EXPOSED OR CONCEALED, COVERED OR UNCOVERED, IN ACCORDANCE WITH OSHA AND ANSI REGULATIONS. IDENTIFY PIPES NEAR EACH VALVE WITH "BRANDY-PERMA CODE PIPE TAPE" OR T. & B. WESTLINE "TEL-A-PIPE" INDICATING DIRECTION OF FLOW, SERVICE ZONE, AND SIZE. TAPE SHALL BE APPLIED TO PIPE, CONDUIT, OR COVERING. VALVES, CONTROLS, AND DAMPERS SHALL BE IDENTIFIED BY 2-INCH LACQUERED BRASS TAGS WITH STAMPED LETTERS FASTENED WITH "S" HOOKS OR CHAINS. EQUIPMENT IS TO BE IDENTIFIED AS TO FUNCTION AND PURPOSE BY MEANS OF PERMANENTLY ATTACHED LAMINATED PHENOLIC NAMEPLATES WITH BEVELED EDGES AND WHITE LETTERS ON BLACK BACKGROUND.

10. AT THE CONCLUSION OF THE WORK, ALL EQUIPMENT AND SYSTEMS SHALL BE CAREFULLY BALANCED, ADJUSTED, AND TESTED TO PROVIDE BALANCED, QUIET-OPERATING, STABLE AND SAFE SYSTEMS. DEMONSTRATE OPERATION OF ALL SYSTEMS TO THE OWNER'S DESIGNATED REPRESENTATIVE.

HVAC

1. PIPE INSULATION:
ALL REFRIGERANT AND CHILLED WATER SHALL BE INSULATED WITH 1-1/2", (2" ON EXTERIOR USE), THICK PREFORMED FIBERGLASS INSULATION. PROVIDE ALL SERVICE JACKET. PROVIDE METAL JACKET IN EXPOSED AREAS, I.E.: EXTERIOR.

2. ALL DUCTWORK TO BE IN ACCORDANCE WITH THE LATEST ISSUE OF THE SMACNA MANUAL ENTITLED "HVAC DUCT CONSTRUCTION STANDARDS- METAL AND FLEXIBLE". SUPPLY AND RETURN AIR DUCTWORK SHALL BE GALVANIZED METAL EXCEPT WHERE OTHERWISE INDICATED. ALL ELBOWS SHALL BE FULL INSIDE RADIUS THROAT. WHERE SQUARE ELBOWS ARE REQUIRED DUE TO CONSTRUCTION LIMITS, ELBOWS SHALL BE FITTED WITH DOUBLE-FACED TURNING VANES. KITCHEN HOOD EXHAUST DUCTWORK SHALL BE WITHOUT TURNING VANES AND CONSTRUCTED PER NFPA 96 (INCLUDING ENCLOSURE).

3. PROVIDE OPPOSED BLADE BALANCING DAMPERS AT EACH SUPPLY AIR CONNECTING TO MAIN DUCTS AND WHEREVER NECESSARY TO FACILITATE AIR BALANCING OF THE DUCT SYSTEM.

4. ALL JOINTS, LONGITUDINAL AND TRANSVERSE SEAMS, AND CONNECTIONS IN DUCTWORK MUST BE SECURELY SEALED USING WELDMENTS; MECHANICAL FASTENERS WITH SEALS, GASKETS OR MASTICS; MESH AND MASTICS SEALING SYSTEMS; OR TAPES. TAPES AND MASTICS MUST BE LISTED AND LABELED IN ACCORDANCE WITH UL 181A AND SHALL BE MARKED '181A-P' FOR PRESSURE SENSITIVE TAPE; '181A-M' FOR MASTIC OR '181A-H' FOR HEAT-SENSITIVE TYPE. TAPES AND MASTICS USED TO SEAL FLEXIBLE AIR DUCTS AND FLEXIBLE AIR CONNECTORS SHALL COMPLY WITH UL 181B AND SHALL BE MARKED '181B-FX' FOR PRESSURE-SENSITIVE TAPE OR '181B-M' FOR MASTIC. UNLISTED DUCT TAPE IS NOT PERMITTED AS A SEALANT ON ANY METAL DUCTS.

5. AIR DUCTS MUST BE INSULATED TO THE FOLLOWING LEVELS:
   a. SUPPLY AND RETURN AIR DUCTS FOR CONDITIONED AIR LOCATED IN UNCONDITIONED SPACES (SPACES NEITHER HEATED NOR COOLED) MUST BE INSULATED WITH A MINIMUM OF R-6. UNCONDITIONED SPACES INCLUDE ATTICS, CRAWL SPACES, UNHEATED BASEMENTS, AND UNHEATED GARAGES.
   b. SUPPLY AND RETURN AIR DUCTS AND PLENUMS MUST BE INSULATED TO A MINIMUM OF R-8 WHEN LOCATED OUTSIDE THE BUILDING.
   C. WHEN DUCTS ARE LOCATED WITHIN EXTERIOR COMPONENTS (e.g., FLOORS OR ROOFS), MINIMUM R-8 INSULATION IS REQUIRED ONLY BETWEEN THE DUCT AND THE BUILDING EXTERIOR.

6. LINE ALL RECTANGULAR DUCTWORK WITH 1" THICK, 1 1/2 LB DENSITY DUCT LINER. LINING SHALL BE APPLIED TO DUCTWORK WITH FIRE RESISTIVE ADHESIVES, FOSTER 85-10 OR EQUAL, AND COPPER OR CADMIUM PLATED MECHANICAL FASTENERS, GRAHAM, OMARK, OR EQUAL.

7. FLEXIBLE DUCTWORK, WHERE INDICATED ON THE DRAWINGS, SHALL BE INSULATED WITH PLASTIC VAPOR BARRIER AT INTERIOR AND EXTERIOR, STEEL WIRE COIL REINFORCED. JOINTS SHALL BE BAND-CLAMPED AND TAPE SEALED TO MAINTAIN INTEGRITY OF VAPOR BARRIER. FLEXIBLE DUCT RUNS SHALL BE LIMITED TO 6' OF FLEX DUCT EACH RUNOUT. INSTALLATION SHALL BE SUPPORTED TO ELIMINATE SAGS. TURNS IN FLEXIBLE DUCT SHALL NOT EXCEED ONE EQUIVALENT FULL- RADIUS ELBOW PER 6' RUNOUT.

8. BALANCE ALL EQUIPMENT, DIFFUSERS, AND GRILLES TO OBTAIN THE AIR QUANTITIES AS SHOWN ON PLANS. CONTRACTOR SHALL PROVIDE (5) FIVE BOUND COPIES OF A CERTIFIED TEST AND BALANCE REPORT WITH FORMS CONTAINING INFORMATION INDICATED IN SCHEDULES. SUBMIT REPORT TO ARCHITECT/ENGINEER FOR REVIEW PRIOR TO PROJECT CLOSEOUT.

   COPY OF AIR BALANCE REPORT TO MECH. INSPECTOR FOR FINAL APPROVAL.

9. PROVIDE FLEXIBLE DUCT CONNECTORS ON INLET AND OUTLET OF ALL AIR MOVING EQUIPMENT, INCLUDING EXHAUST FANS AND FAN COIL UNITS.

10. REFER TO DRAWING SCHEDULE(S) FOR EQUIPMENT REQUIREMENTS.

11. ALL EQUIPMENT TO BE COMPLETELY SCREENED BY EXISTING PARAPET WALL.

SPLIT SYSTEM HEAT PUMP SCHEDULE

(AHU 1-4) UNIT MARK / NUMBER

INDOOR UNIT							OUTDOOR UNIT										
MARK	S.A. (CFM)	O.S.A. (CFM)	E.S.P. (IN WC)	FAN COIL ELECTRICAL VOLTS/PH./MCA	OPER. WEIGHT	MANUFACTURER/ MODEL NUMBER OR EQUAL	MARK	TOTAL CAPACITY (MBH)	SENSIBLE CAPACITY (MBH)	ENTERING AIR TEMP. (°F) DB / WB	HEATING (MBH)	ELECTRICAL VOLTAGE/PH./MCA	HSPF	SEER	MANUFACTURER/ MODEL NUMBER OR EQUAL	NOTES
AHU 1	1,890	60	0.5 (Top 5)	230/1/7.5	201	CARRIER FX4DNF061	CU 1	49.8	41.0	76.5/59.5	45.6	230/1/34.2	8.5	15.0	CARRIER 25HNB560	1, 2, 3, 4, 5
AHU 2	1,890	60	0.5 (Top 5)	230/1/7.5	201	CARRIER FX4DNF061	CU 2	49.8	41.0	76.8/57.4	45.6	230/1/34.2	8.5	15.0	CARRIER 25HNB560	1, 2, 3, 4, 5
AHU 3	1,610	40	0.5 (Top 5)	230/1/7.5	185	CARRIER FX4DNF049	CU 3	40.1	33.1	76.3/59.5	37.4	230/1/28.5	8.7	15.0	CARRIER 25HNB548	1, 2, 3, 4, 5
AHU 4	1,380	0	0.5 (Top 5)	230/1/5.1	157	CARRIER FX4DNF043	CU 4	35.6	28.7	75.4/60.2	33.4	230/1/27.6	8.5	15.0	CARRIER 25HNB542	1, 2, 3, 4, 5

NOTES
1. INSTALL UNITS AS RECOMMENDED BY MANUFACTURER.
2. PROVIDE ALL REQUIRED MATERIALS & REFRIGERANT LINES FOR A COMPLETE INSTALLATION
3. PROVIDE PERMANENT LABEL FOR CONDENSING UNIT.
4. PROVIDE ALL UNITS WITH REFRIGERANT LINES IN EXCESS OF 50' WITH HARD START KIT, CRANKCASE HEATER, TIME GUARD, AND VALVE AT CONDENSER. INSTALL AND ADJUST REFRIGERANT AND COIL CHARGE PER MANUFACTURES INSTRUCTIONS. ALL REFRIGERANT LINES TO BE SIZED BY THE MANUFACTURER AND WARRANTY.
5. PROVIDE MOUNTING PAD FOR OUTSIDE UNIT.

* AMBIENT TEMPERATURE _ 115.0 / 32 °F

EXHAUST FAN SCHEDULE

(EF 1) UNIT MARK / NUMBER

MARK	AIR FLOW (CFM)	STATIC PRESSURE	TYPE	DRIVE	RPM	ELECTRICAL VOLTS	PHASE	AMPS	HP	MANUFACTURER/ MODEL # (OR EQUAL)	NOTES
EF 1 (TYP.)	70 EACH	0.125"	CEILING	DIRECT	–	120	1	1.2	–	BROAN 671	1, 2, 3

NOTES
1. INSTALL PER MANUFACTURER'S INSTRUCTIONS.
2. PROVIDE W/INTEGRAL GRILLE, BACKDRAFT DAMPER, BIRDSCREEN, AND FAN SPEED CONTROL.
3. PROVIDE SEPARATE SWITCH FOR FAN CONTROL.

DIFFUSER AND GRILLE SCHEDULE

(S1) DIFFUSER MARK / CFM

MARK	TYPE	RUNOUT SIZE	NECK SIZE	PANEL SIZE	MANUFACTURER/ MODEL NUMBER OR EQUAL	NOTES
S1 –	SUPPLY GRILLE	10"ø	10"x10"	12"x12"	TITUS 250-AA	1, 2, 3, 4, 5
S2 –	SUPPLY GRILLE	10"ø	10"x10"	12"x12"	TITUS 300RS	1, 2, 3, 5
S3 –	SUPPLY GRILLE	8"ø	8"x8"	10"x10"	TITUS 250-AA	1, 2, 3, 4, 5
S4 –	SUPPLY GRILLE	8"ø	8"x8"	10"x10"	TITUS 300RS	1, 2, 3, 5
S5 –	SUPPLY GRILLE	6"ø	6"x6"	8"x8"	TITUS 250-AA	1, 2, 3, 4, 5
S6 –	SUPPLY GRILLE	6"ø	6"x6"	8"x8"	TITUS 300RS	1, 2, 3, 5
R1 –	RETURN GRILLE	20"x20"	20"x20"	22"x22"	TITUS 350RL	1, 3, 5
R2 –	RETURN GRILLE	10"x10"	10"x10"	12"x12"	TITUS 350RL	1, 3, 5

NOTES
1. COORDINATE LOCATIONS WITH ARCHITECTURAL AND ELECTRICAL PLANS.
2. PROVIDE WITH BALANCING DAMPER.
3. PROVIDE SUITABLE FRAME FOR CEILING/WALL TYPE, COORDINATE W/ARCH. PLANS.
4. PROVIDE 4-WAY THROW UNLESS INDICATED OTHERWISE ON PLANS. (1-W = 1-WAY, 2-W = 2-WAY, 3-W = 3-WAY)
5. MAXIMUM NC RATING SHALL NOT EXCEED 34.

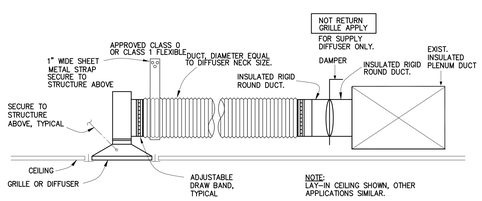

CEILING DIFFUSER DETAIL (5 / M-1)
SCALE: NTS

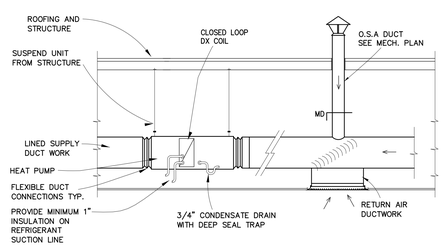

AHU HORIZONTAL INSTALLATION DETAIL (6 / M-1)
NO SCALE

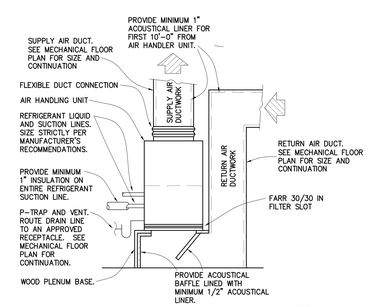

VERTICAL AIR HANDLING UNIT (7 / M-1)
NO SCALE

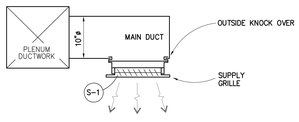

SUPPLY GRILLE DETAIL (8 / M-1)
SCALE: NTS

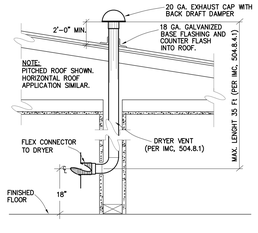

CLOTHES DRYER VENT THRU ROOF (1 / M-1)
NO SCALE

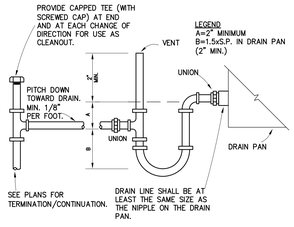

CONDENSATE DRAIN TRAP (2 / M-1)
NO SCALE

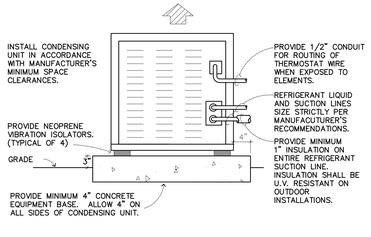

CONDENSING UNIT DETAIL (3 / M-1)
NO SCALE

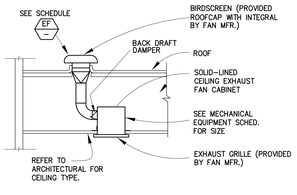

CEILING EXHAUST FAN DETAIL (4 / M-1)
SCALE: NTS

CITY OF PHOENIX
Planning and Development Department
BY: Justine Cornelius
05/11/2023
This set of plans has been reviewed for **PHOENIX CONSTRUCTION CODE** requirements prior to issuance of Building Permit and shall be kept at the construction site. Such review shall not prevent the Building Official from requiring correction of errors in the plans where such errors are subsequently found to be in violation of any law or ordinance.

THE INFORMATION CONTAINED ON THESE DRAWINGS SUCH AS DATA, DESIGNS, AND CONCEPTS, ARE PROPERTY OF PROCADESIGN LLC AND SHALL NOT BE DISCLOSED FOR OTHER PURPOSE OTHER THAN ORIGINALLY INTENDED WITHOUT WRITTEN PERMISSION OF THE DESIGNER/CONSULTANT.

#	REVISIONS	DATE

JOKAKE RESIDENCE
4441 N JOKAKE DR
SCOTTSDALE AZ 85251

DRAWN BY: ProCADesign
CONTACT #
www.procadesign.net
(602) 606-2885
angelica@procadesign.com

DATE: 12/10/2020
SCALE: AS SHOWN
NAME SHEET: MECHANICAL FLOOR PLAN
SHEET: M1

Registered Professional Engineer (Mechanical)
CERTIFICATE NO. 72554
BOJAN GRBIC
Date Signed 05-11-22
ARIZONA, U.S.A.
EXPIRES: 03/31/2024

MG ENGINEERING, LLC
Voice: (602) 758 6088
Fax: (602) 266 2534
Email: engrs@mgmech.com

Electronic copy of final design document originally sealed by registered mechanical engineer. There shall be no deviation from these drawings or any accompanying specifications without written consent of the engineer.

PROJECT NUMBER: MG22-04

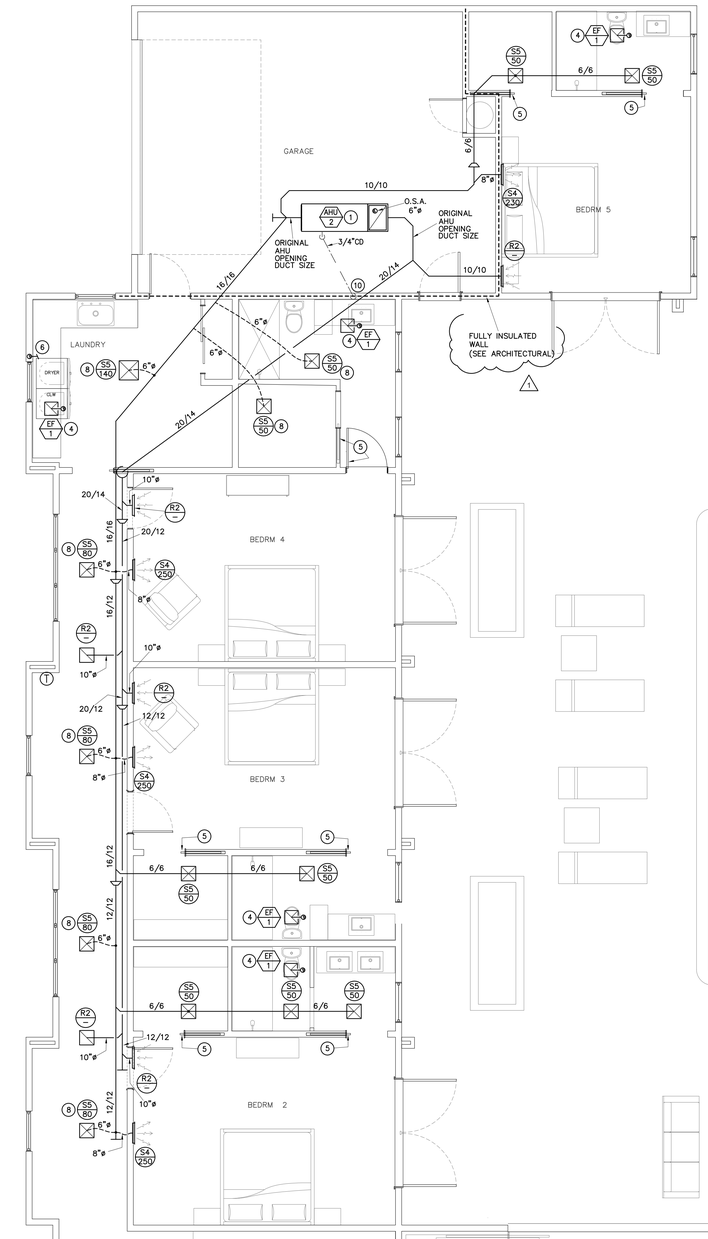

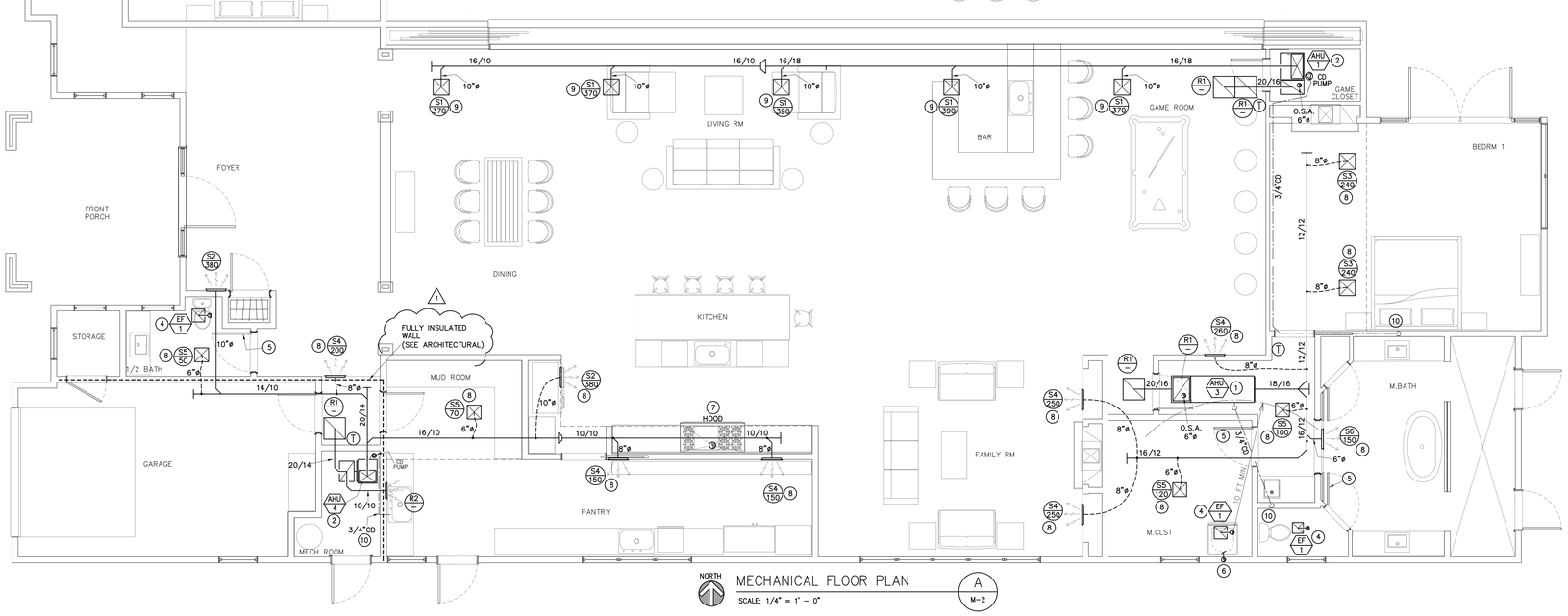

NORTH

MECHANICAL FLOOR PLAN (A / M-2)

SCALE: 1/4" = 1' - 0"

KEY NOTES:

1. HORIZONTAL MOUNTED (INSTALLED IN CEILING) AIR-HANDLING UNIT (AHU). INSTALL AS PER MANUFACTURER'S INSTRUCTIONS AND DETAILS 2 & 6/M-1. FOR MODEL INFORMATION REFER TO SCHEDULE ON THE SAME SHEET.
2. VERTICAL (FLOOR MOUNTED) AIR-HANDLING UNIT (AHU). INSTALL AS PER MANUFACTURER'S INSTRUCTIONS AND DETAILS 2 & 7/M-1. FOR MODEL INFORMATION REFER TO SCHEDULE ON THE SAME SHEET.
3. CONDENSING UNIT LOCATION. PROVIDE 4 INCH. HEIGHT CONCRETE MAINTENANCE PAD UNDER AIR-COOLED OUTDOOR CONDENSER UNIT. FOR MODEL REFER TO SCHEDULE ON M-1. REFER TO DETAIL 3/M-1.
4. CEILING MOUNTED EXHAUST FAN. ROUTE E/A DUCT THRU ROOF TO EXTERIOR. PROVIDE ROOF MOUNTED BACK DRAFT DAMPER. FOR MODEL REFER TO SCHEDULE ON M-1 AND FOR INSTALLATION TO DETAIL 4 ON SAME SHEET.
5. 1/2" UNDERCUT DOOR.
6. 4" DRYER VENT LINE TO EXTERIOR. PROVIDE ROOF JACK AND PAINT TO MATCH ADJACENT SURFACE. FOR INSTALLATION REFER TO DETAIL 1/M-1.
7. RESIDENTIAL TYPE OF KITCHEN HOOD, TO BE EXHAUSTED DIRECTLY TO THE OUTDOORS. CONTRACTOR TO PROVIDE KITCHEN HOOD EXHAUST FAN THAT SHALL BE EQUAL OR LESS THAN 400 CFM IN SIZE.
8. TYPICAL CEILING MOUNTED SUPPLY/RETURN DIFFUSER INSTALLATION. REFER TO DETAIL 5/M-1.
9. TYPICAL DUCT MOUNTED SUPPLY/RETURN DIFFUSER INSTALLATION. REFER TO DETAIL 8/M-1.
10. 3/4" CONDENSATE LINE ROUTES TO LAV/SINK TRAP TAIL PIECE OR OTHER APPROVED LOCATION AS PER IRC, M1411.3. MAINTAIN MINIMUM 1/8" PER FT SLOPE ON ALL CONDENSATE LINES.

GENERAL NOTES:

1. REFER TO DIFFUSER AND GRILLE SCHEDULE FOR ANY UNMARKED RUNOUT SIZES.
2. COORDINATE EXACT LOCATIONS OF DIFFUSERS AND GRILLES WITH LIGHTING AND ARCHITECTURAL PLANS.
3. COORDINATE EXACT ROUTING OF DUCTWORK WITH ALL TRADES. ROUTING SHOWN IS SCHEMATIC ONLY.
4. VENT PIPING AND DUCTS THRU ROOF SHALL MAINTAIN MINIMUM 10'-0" CLEAR OF ALL O/A INTAKES.
5. DUCT INSULATION AND SEALING SHALL COMPLY WITH REQUIREMENTS FROM IECC, SECTION R403.3.1 & R403.3.2.
6. SEAL ALL ROOF PENETRATIONS WATER TIGHT.
7. COORDINATE EXACT MOUNTING LOCATION OF T'STATS WITH ARCHITECTURAL PLANS. INSTALL T-STATS AT 48"A.F.F. INSTALL T-STATS PER LATEST ADA REQUIREMENTS.
8. MATERIAL FOR CONDENSATE LINE: TYPE "M" COPPER TUBING OR PVC.
9. IRC & IECC 2018 USED.

1

MIN. VENTILATION AIR CALCULATIONS

CFM = 0.01 x TOTAL SF + 7.5 x (BED RM NUMBER + 1)

AHU-1
O.S.A. AMOUNT = 0.01 x 1,510 + 7.5 x 2 = 22.6 CFM
PROVIDED 100 CFM OSA.

AHU-2
O.S.A. AMOUNT = 0.01 x 2,140 + 7.5 x 4 = 51.4 CFM
PROVIDED 100 CFM OSA.

AHU-3
O.S.A. AMOUNT = 0.01 x 1,315 + 7.5 x 4 = 28.2 CFM
PROVIDED 100 CFM OSA.

AHU-4
O.S.A. AMOUNT = 0.01 x 1,010 + 7.5 x 4 = 17.6 CFM
PROVIDED 100 CFM OSA.

IRC 2018, SECTION M1505.4.3; EQUATION 15-1

1

CITY OF PHOENIX
Planning and Development Department
BY: Justine Cornelius
05/11/2023
This set of plans has been reviewed for **PHOENIX CONSTRUCTION CODE** requirements prior to issuance of Building Permit and shall be kept at the construction site. Such review shall not prevent the Building Official from requiring correction of errors in the plans where such errors are subsequently found to be in violation of any law or ordinance.

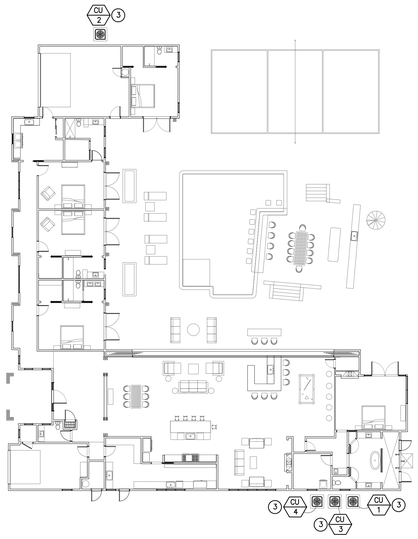

NORTH

SITE PLAN (B / M-2)

SCALE: 1/16" = 1' - 0"

1 CITY COMMENTS 12-10-2022

Bojan Gribic
Registered Professional Engineer (Mechanical)
CERTIFICATE NO. 72554
BOJAN GRIBIC
Date Signed 02-14-22
ARIZONA, U.S.A.
EXPIRES: 03.31.2024

MG ENGINEERING, LLC
Voice: (602) 758 6088
Fax: (602) 268 2534
Email: engrs@mgmech.com

Electronic copy of final design document originally sealed by registered mechanical engineer. There shall be no deviation from these drawings or any accompanying specifications without written consent of the engineer.

PROJECT NUMBER: MG22-04

PROCADESIGN LLC

THE INFORMATION CONTAINED ON THESE DRAWINGS SUCH AS DATA, DESIGNS, AND CONCEPTS, ARE PROPERTY OF PROCADESIGN LLC AND MAY NOT BE USED FOR ANY OTHER PURPOSE OTHER THAN ORIGINALLY INTENDED WITHOUT WRITTEN PERMISSION OF THE DESIGNER/CONSULTANT.

#	REVISIONS	DATE

JOKAKE RESIDENCE
4441 N JOKAKE DR
SCOTTSDALE AZ 85251

DRAWN BY: ProCaDesign
CONTACT #
www.procadesign.net
(602) 606-2885
angelica@procadesign.com
DATE: 12/10/2020
SCALE: AS SHOWN
NAME SHEET: MECHANICAL FLOOR PLAN
SHEET: M2

Generated by RES*check-Web* Software

Compliance Certificate

Project Jokake Residence

Energy Code: **2018 IECC**
Location: **Scottsdale, Arizona**
Construction Type: **Single-family**
Project Type: **New Construction**
Conditioned Floor Area: **5,510 ft2**
Climate Zone: **2 (1366 HDD)**
Permit Date:
Permit Number:

Construction Site:
4441 N Jokake Dr
Scottsdale, AZ 85251

Owner/Agent:
ProCa Design LLC
Phoenix, AZ
602-606-2885
angelica@procadesign.com

Designer/Contractor:
Bojan Grbic
MG Engineering LLC
Phoenix, AZ 85032
602-758-6088
engrs@mgmech.com

Mechanical Equipment

Description	Fuel type	Efficiency
Heat Pump		8.5 HSPF, 15 SEER
Heat Pump		8.7 HSPF, 15 SEER

BOJAN GRBIC, PE

12-09-2022

RES*check* Software Version : REScheck-Web

Inspection Checklist

Energy Code: 2018 IECC

Requirements: 100.0% were addressed directly in the RES*check* software

Text in the "Comments/Assumptions" column is provided by the user in the REScheck Requirements screen. For each requirement, the user certifies that a code requirement will be met and how that is documented, or that an exception is being claimed. Where compliance is itemized in a separate table, a reference to that table is provided.

Section # & Req.ID	Pre-Inspection/Plan Review	Plans Verified Value	Field Verified Value	Complies?	Comments/Assumptions
103.1, 103.2, 403.7 [PR3][1]	Construction drawings and documentation demonstrate energy code compliance for lighting and mechanical systems. Systems serving multiple dwelling units must demonstrate compliance with the IECC Commercial Provisions.			☐Complies ☐Does Not ☐Not Observable ☐Not Applicable	Requirement will be met.
302.1, 403.7 [PR2][1]	Heating and cooling equipment is sized per ACCA Manual S based on loads calculated per ACCA Manual J or other methods approved by the code official.	Heating: Btu/hr____ Cooling: Btu/hr____ SEE SCHEDULE ON M-1 SHEET	Heating: Btu/hr____ Cooling: Btu/hr____	☐Complies ☐Does Not ☐Not Observable ☐Not Applicable	Requirement will be met.

Additional Comments/Assumptions:

1 High Impact (Tier 1) | 2 Medium Impact (Tier 2) | 3 Low Impact (Tier 3)

Section # & Req.ID	Foundation Inspection	Complies?	Comments/Assumptions
403.9 [F012][1]	Snow- and ice-melting system controls installed.	☐Complies ☐Does Not ☐Not Observable ☐Not Applicable	**Exception:** Requirement is not applicable.

Additional Comments/Assumptions:

1 High Impact (Tier 1) | 2 Medium Impact (Tier 2) | 3 Low Impact (Tier 3)

Section # & Req.ID	Framing / Rough-In Inspection	Plans Verified Value	Field Verified Value	Complies?	Comments/Assumptions
405.2 [FR25][1]	All ducts in unconditioned spaces or outside the building envelope are insulated to a*R*-6.	R-6	R-____	☐Complies ☐Does Not ☐Not Observable ☐Not Applicable	Requirement will be met.
403.3.5 [FR15][1]	Building cavities are not used as ducts or plenums.			☐Complies ☐Does Not ☐Not Observable ☐Not Applicable	Requirement will be met.
403.4 [FR17][1]	HVAC piping conveying fluids above 105 ºF or chilled fluids below 55 ºF are insulated to a*R*-3.	R-3	R-____	☐Complies ☐Does Not ☐Not Observable ☐Not Applicable	Requirement will be met.
403.4.1 [FR24][1]	Protection of insulation on HVAC piping.			☐Complies ☐Does Not ☐Not Observable ☐Not Applicable	Requirement will be met.

Additional Comments/Assumptions:

1 High Impact (Tier 1) | 2 Medium Impact (Tier 2) | 3 Low Impact (Tier 3)

Section # & Req.ID	Final Inspection Provisions	Plans Verified Value	Field Verified Value	Complies?	Comments/Assumptions
403.3.3 [F027][1]	Ducts are pressure tested to determine air leakage with either: Rough-in test: Total leakage measured with a pressure differential of 0.1 inch w.g. across the system including the manufacturer's air handler enclosure if installed at time of test. Postconstruction test: Total leakage measured with a pressure differential of 0.1 inch w.g. across the entire system including the manufacturer's air handler enclosure.	4 cfm/100 ft2	____ cfm/100 ft2	☐Complies ☐Does Not ☐Not Observable ☐Not Applicable	Requirement will be met.
403.3.4 [F014][1]	Duct tightness test result of <=4 cfm/100 ft2 across the system or <=3 cfm/100 ft2 without air handler @ 25 Pa. For rough-in tests, verification may need to occur during Framing Inspection.	4 cfm/100 ft2	____ cfm/100 ft2	☐Complies ☐Does Not ☐Not Observable ☐Not Applicable	Requirement will be met.
403.3.2.1 [F024][1]	Air handler leakage designated by manufacturer at <=2% of design air flow.			☐Complies ☐Does Not ☐Not Observable ☐Not Applicable	Requirement will be met.
403.1.1 [FI9][1]	Programmable thermostats installed for control of primary heating and cooling systems and initially set by manufacturer to code specifications.			☐Complies ☐Does Not ☐Not Observable ☐Not Applicable	Requirement will be met.
403.1.2 [FI10][1]	Heat pump thermostat installed on heat pumps.			☐Complies ☐Does Not ☐Not Observable ☐Not Applicable	Requirement will be met.
403.5.1 [FI11][1]	Circulating service hot water systems have automatic or accessible manual controls.			☐Complies ☐Does Not ☐Not Observable ☐Not Applicable	Requirement will be met.
403.6.1 [F025][1]	All mechanical ventilation system fans not part of tested and listed HVAC equipment meet efficacy and air flow limits per Table R403.6.1.			☐Complies ☐Does Not ☐Not Observable ☐Not Applicable	Requirement will be met.
403.2 [F026][1]	Hot water boilers supplying heat through one- or two-pipe heating systems have outdoor setback control to lower boiler water temperature based on outdoor temperature.			☐Complies ☐Does Not ☐Not Observable ☐Not Applicable	**Exception:** Requirement is not applicable.
403.5.1.1 [F028][1]	Heated water circulation systems have a circulation pump. The system return pipe is a dedicated return pipe or a cold water supply pipe. Gravity and thermos-syphon circulation systems are not present. Controls for circulating hot water system pumps start the pump with signal for hot water demand within the occupancy. Controls automatically turn off the pump when water is in circulation loop is at set-point temperature and no demand for hot water exists.			☐Complies ☐Does Not ☐Not Observable ☐Not Applicable	Requirement will be met.

1 High Impact (Tier 1) | 2 Medium Impact (Tier 2) | 3 Low Impact (Tier 3)

Section # & Req.ID	Final Inspection Provisions	Plans Verified Value	Field Verified Value	Complies?	Comments/Assumptions
403.5.1.2 [F029][1]	Electric heat trace systems comply with IEEE 515.1 or UL 515. Controls automatically adjust the energy input to the heat tracing to maintain the desired water temperature in the piping.			☐Complies ☐Does Not ☐Not Observable ☐Not Applicable	**Exception:** Requirement is not applicable.
403.5.2 [F030][1]	Demand recirculation water systems have controls that manage operation of the pump and limit the temperature of the water entering the cold water piping to <= 104ºF.			☐Complies ☐Does Not ☐Not Observable ☐Not Applicable	Requirement will be met.
403.5.4 [F031][1]	Drain water heat recovery units tested in accordance with CSA 855.1. Potable water-side pressure loss of drain water heat recovery units: < 3 psi for individual units connected to one or two showers. Potable water-side pressure loss of drain water heat recovery units: < 2 psi for individual units connected to three or more showers.			☐Complies ☐Does Not ☐Not Observable ☐Not Applicable	**Exception:** Requirement is not applicable.
404.1 [F40][1]	90% or more of permanent fixtures have high efficacy lamps.			☐Complies ☐Does Not ☐Not Observable ☐Not Applicable	Requirement will be met.
404.1.1 [F123][1]	Fuel gas lighting systems have no continuous pilot light.			☐Complies ☐Does Not ☐Not Observable ☐Not Applicable	**Exception:** Requirement is not applicable.
303.3 [FI18][1]	Manufacturer manuals for mechanical and water heating systems have been provided.			☐Complies ☐Does Not ☐Not Observable ☐Not Applicable	Requirement will be met.

Additional Comments/Assumptions:

1 High Impact (Tier 1) | 2 Medium Impact (Tier 2) | 3 Low Impact (Tier 3)

CITY OF PHOENIX
Planning and Development Department
BY: Justine Cornelius
05/11/2023
This set of plans has been reviewed for **PHOENIX CONSTRUCTION CODE** requirements prior to issuance of Building Permit and shall be kept at the construction site. Such review shall not prevent the Building Official from requiring correction of errors in the plans where such errors are subsequently found to be in violation of any law or ordinance.

1 CITY COMMENTS 12-10-2022

Registered Professional Engineer (Mechanical) CERTIFICATE NO. 72554 BOJAN GRBIC Date Signed 12-12-22 ARIZONA, U.S.A. EXPIRES: 03/31/23

MG ENGINEERING, LLC
Voice: (602) 758 6088
Fax: (602) 266 2534
Email: engrs@mgmech.com

Electronic copy of final design document originally sealed by registered mechanical engineer. There shall be no deviation from these drawings or any accompanying specifications without written consent of the engineer.

PROJECT NUMBER: MG22-04

PROCA DESIGN LLC

THE INFORMATION CONTAINED ON THESE DRAWINGS SUCH AS DATA, DESIGNS, AND CONCEPTS, ARE PROPERTY OF PROCADESIGN LLC AND SHALL NOT BE USED FOR ANY OTHER PURPOSE OTHER THAN ORIGINALLY INTENDED WITHOUT WRITTEN PERMISSION OF THE DESIGNER/CONSULTANT.

#	REVISIONS	DATE

JOKAKE RESIDENCE
4441 N JOKAKE DR
SCOTTSDALE AZ 85251

DRAWN BY: PROCADESIGN
CONTACT #
www.procadesign.net
(602) 606-2885
angelica@procadesign.com
DATE: 12/10/2020
SCALE: AS SHOWN
NAME SHEET: IECC, ENERGY COMPLIANCE
SHEET: M3

SPECIFICATIONS

GENERAL

1. THE CONTRACTOR SHALL PROVIDE THE WORK SHOWN ON THE DRAWINGS AND SPECIFIED FOR THEIR INDIVIDUAL SECTIONS OF WORK. THE WORD "WORK" SHALL MEAN ALL LABOR, TRANSPORTATION, MATERIAL, EQUIPMENT, TOOLS, INSTALLATION, SUPERVISION, AND ANY OTHER INCIDENTAL ITEMS OR SERVICES OBVIOUSLY NECESSARY FOR THE PROPER INSTALLATION AND OPERATION OF THE COMPLETE SYSTEMS, WHICH SHALL BE PROVIDED WHETHER OR NOT SPECIFICALLY MENTIONED OR SHOWN.
2. ALL GENERAL CONDITIONS, SPECIAL REQUIREMENTS OR GENERAL REQUIREMENTS OF THE GENERAL CONSTRUCTION SPECIFICATION ARE PART OF THIS SPECIFICATION AND HAVE THE SAME FORCE AND EFFECT AS IF PRINTED HERE IN FULL.
3. THE WORD "PROVIDE" SHALL MEAN FURNISH AND INSTALL, MAKE ALL FINAL CONNECTIONS, AND LEAVE IN AN APPROVED OPERATING CONDITION.
4. ALL WORK SHALL BE DONE IN ACCORDANCE WITH THE LATEST ADOPTED EDITION OF THE APPLICABLE UNIFORM BUILDING, MECHANICAL, PLUMBING, AND ELECTRICAL CODES, AND FEDERAL, STATE, AND LOCAL REGULATIONS.
5. THE CONTRACTOR SHALL BE RESPONSIBLE FOR THE FOLLOWING: WORKMEN'S IDENTIFICATION AND SAFETY, FIRE PROTECTION, CONTRACTOR'S LIABILITY INSURANCE, SAFETY BARRICADES, WARNING SIGNS, AND TRASH REMOVAL.
6. THE CONTRACTOR SHALL BE RESPONSIBLE FOR PAYING ALL FEES AND OBTAINING ALL PERMITS AND INSPECTIONS REQUIRED FOR THE WORK.
7. THE CONTRACTOR SHALL CAREFULLY EXAMINE ALL DRAWINGS FOR THE BUILDING, AND FOR OTHER TRADES, AND SHALL COORDINATE THE WORK WITH ALL OTHER TRADES, INCLUDING, BUT NOT LIMITED TO, THE CONSTRUCTION DOCUMENTS, SHOP DRAWINGS, ETC. FOR ALL GENERAL CONSTRUCTION, STRUCTURAL, MECHANICAL, AND ELECTRICAL AND SPECIALTY CONTRACTOR WORK. THE CONTRACTOR SHALL BE RESPONSIBLE FOR THE PROPER FITTING OF MATERIAL INTO THE BUILDING AS PLANNED, WITHOUT INTERFERENCE WITH OTHER WORK, AND SHALL MAKE REASONABLE MODIFICATIONS IN THE LAYOUT AS NEEDED
TO PREVENT CONFLICT WITH OTHER TRADES, TO PROVIDE ACCESS AND FOR THE PROPER EXECUTION OF THE WORK.
8. DRAWINGS ARE DIAGRAMMATIC, SMALL SCALE, AND INDICATE THE GENERAL ARRANGEMENT OF SYSTEMS AND WORK INCLUDED. CERTAIN COMPONENTS, APPURTENANCES, AND RELATED SPECIALTIES ARE NOT SHOWN, AND SHALL BE PROVIDED. IT IS THE INTENT OF THE DRAWING AND SPECIFICATIONS TO CALL FOR FINISHED WORK, TESTED AND READY FOR OPERATION. DO NOT SCALE DRAWINGS. ARRANGEMENT OF EQUIPMENT AND ROUTING OF PIPES AND DUCTWORK, ETC. INDICATED ON DRAWINGS MAY REQUIRE MODIFICATION DUE TO UNFORESEEN CONDITIONS AND REQUIRED ON SITE REVISIONS DURING CONSTRUCTION. (SEE ALSO "BIDDING")
9. ALL WORK REQUIRED FOR IDENTICAL ITEMS SHOWN ON THE DRAWINGS SHALL BE PROVIDED ALTHOUGH EACH SPECIFIC IDENTICAL ITEM MAY NOT BE SHOWN IN DETAIL– OR CALLED OUT.
10. THE CONTRACTOR SHALL PROVIDE (5) COPIES OF SUBMITTALS AT ONE TIME, BOUND IN A NEAT & ORDERLY MANNER. PARTIAL OR UNMARKED SUBMITTALS WILL NOT BE ACCEPTED. SUBMITTALS SHALL INCLUDE ALL EQUIPMENT, MATERIALS, AND DEVICES FOR REVIEW BY THE ENGINEER. WORK SHALL NOT START UNTIL ALL REVIEWS HAVE BEEN COMPLETED AND THE ITEMS TO BE PROVIDED ARE ACCEPTABLE. ALL MATERIALS AND EQUIPMENT SHALL BE COMMONLY USED ACCEPTABLE GRADES IN THE CONSTRUCTION INDUSTRY AND SHALL BEAR THE "U.L.", ASME, AMCA, OR OTHER LABEL WHEN APPLICABLE.
11. UPON COMPLETION OF CONSTRUCTION, THE CONTRACTOR SHALL SUPPLY THE ARCHITECT WITH COMPLETE SETS OF AS–BUILT DOCUMENTS ACCURATELY SHOWING THE MATERIALS AND EQUIPMENT AS INSTALLED.
12. ALL MATERIALS AND WORKMANSHIP TO BE GUARANTEED FOR A MINIMUM OF ONE YEAR FROM DATE OF ACCEPTANCE BY OWNER. REFRIGERATION COMPRESSORS SHALL BE GUARANTEED FOR A MINIMUM OF FIVE YEARS FROM DATE OF OWNER'S ACCEPTANCE. IN ADDITION, THE CONTRACTOR SHALL GUARANTEE THAT THE INSTALLATION, WHEN OPERATED IN ACCORDANCE WITH THE CONTRACTOR'S INSTRUCTIONS, WILL DEVELOP CAPACITY AND CHARACTERISTICS INDICATED OR SPECIFIED AND WILL FULFILL EACH AND EVERY REQUIREMENT OF THE DRAWINGS AND SPECIFICATIONS, AND SHOULD THE INSTALLATION IN ANY WAY FAIL TO DO SO, THE CONTRACTOR WILL, WITHOUT DELAY AND WITHOUT COST TO THE OWNER, PROVIDE WHATEVER ADDITIONAL EQUIPMENT, MATERIAL, AND LABOR IS NECESSARY TO CORRECT THE FAULT AND COMPLY WITH THE REQUIREMENTS OF THE DRAWINGS AND SPECIFICATIONS.
13. CONTRACTOR SHALL CHECK AND VERIFY ALL SIZES, DIMENSIONS, AND CONDITIONS BEFORE STARTING ANY WORK. ANY DEVIATIONS OR PROBLEMS SHALL BE TRANSMITTED TO THE ENGINEER FOR REVIEW.
14. PROVIDE BASE AND COUNTER FLASHING FOR ITEMS PENETRATING THE ROOF– COORDINATE WITH ARCHITECTURAL REQUIREMENTS.
15. CONTRACTOR TO FURNISH AND INSTALL ALL STARTERS, WIRING, CONTROLS, DEVICES AND ALL CONDUIT, FOR A COMPLETE AND OPERABLE SYSTEM.
16. ALL WORK SHOWN IS NEW, UNLESS NOTED AS EXISTING.
17. MAINTAIN OCCUPANCY AND FIREWALL SEPARATION INTEGRITY AS REQUIRED. REFER TO ARCHITECTURAL PLANS FOR LOCATIONS OF ALL OCCUPANCY/FIREWALL SEPARATIONS AND SPECIFIC DETAILS FOR CONSTRUCTION. PROVIDE ALL NECESSARY FIRE DAMPERS, ACCESS DOORS, AND CAULKING, ETC. FOR APPROVED INSTALLATION.

BIDDING

1. SUBMISSION OF A BID PROPOSAL, DIRECTLY OR INDIRECTLY BY THE CONTRACTOR FOR THIS WORK, SHALL IMPLY THAT THE BIDDER HAS EXAMINED THE JOB SITE AND UNDERSTANDS THE CONDITIONS THAT MAY AFFECT THE PERFORMANCE OF THE WORK. CONTRACTOR IS EXPECTED TO CONTACT ARCHITECT FOR ANY PARTICULAR PROBLEMS AND CLEAR UP ANY POSSIBLE MISUNDERSTANDING BEFORE BID IS SUBMITTED. NO CONSIDERATION OR ALLOWANCE WILL BE GRANTED FOR ANY ALLEGED MISUNDERSTANDING OF THE CONTRACT DOCUMENTS AND THE WORK TO BE ACCOMPLISHED.
2. BASE PROPOSAL ON MANUFACTURERS NAMED, UNLESS "OR EQUAL" IS INDICATED.

EXECUTION

1. THE CONTRACTOR SHALL PROVIDE ALL SLEEVES, OPENINGS, CUTTING, AND PATCHING NECESSARY FOR THE INSTALLATION OF THE WORK. CUTTING AND PATCHING SHALL BE DONE BY WORKMEN SKILLED IN THE TRADES REQUIRED AND PAID BY THE CONTRACTOR REQUIRING THE WORK COMPLETE.
2. THE CONTRACTOR SHALL PROVIDE ALL RIGGING, HANDLING OF MATERIALS AND EQUIPMENT, AND THE NECESSARY PROTECTION FOR MATERIALS AND EQUIPMENT.
3. TOOLS AND EQUIPMENT WILL BE STORED IN OWNER DESIGNATED AREAS ONLY.
4. THE CONTRACTOR WILL PROTECT THE WORK AND MATERIAL AGAINST DIRT, THEFT, INJURY, OR DAMAGE UNTIL ACCEPTED BY OWNER. ALL WORK SHALL BE TURNED OVER TO OWNER CLEAN AND IN PERFECT CONDITION, READY FOR SATISFACTORY SERVICE.
5. PIPES AND/OR CONDUITS PASSING THROUGH WALL, FLOORS, AND PARTITIONS SHALL BE PROVIDED WITH SLEEVES, EXCEPT AS PROHIBITED BY U.L. LISTING. SLEEVES PASSING THROUGH WATER PROOFING OR DAMP PROOFING SHALL BE WATER TIGHT. PENETRATIONS THROUGH FIRE RATED CONSTRUCTION SHALL BE FIRE PROOFED WITH MATERIAL APPROVED AND AS DEFINED FOR THE RATING OF THE STRUCTURE AND U.L. LISTED.
6. EACH CONTRACTOR SHALL PROVIDE ALL FOUNDATIONS, HANGERS, AND SUPPORTS FOR ALL EQUIPMENT SUPPLIED AND/OR INSTALLED UNDER THEIR WORK. ANY EQUIPMENT WITH MOVING PARTS SHALL BE PROVIDED WITH VIBRATION ISOLATION.
7. ALL EQUIPMENT SHALL BE PROVIDED WITH FACTORY FINISH. ALL REQUIRED PAINTING WILL BE PERFORMED UNDER THE GENERAL CONSTRUCTION SECTION OF THE SPECIFICATIONS
8. WHERE PIPES OR CONDUITS PASS THROUGH WALLS, FLOORS, OR CEILINGS IN FINISHED AREAS, THEY SHALL BE FURNISHED WITH CHROME PLATED ESCUTCHEON PLATES.
9. AT THE CONCLUSION OF THE JOB, EACH PIECE OF EQUIPMENT, VALVE, SWITCH, STARTER, PANEL, PIPE LINE, CONDUIT, ETC., SHALL BE CLEARLY IDENTIFIED WHETHER EXPOSED OR CONCEALED, COVERED OR UNCOVERED, IN ACCORDANCE WITH OSHA AND ANSI REGULATIONS. IDENTIFY PIPES NEAR EACH VALVE WITH "BRANDY–PERMA CODE PIPE TAPE" OR T. & B. WESTLINE "TEL–A–PIPE" INDICATING DIRECTION OF FLOW, SERVICE ZONE, AND SIZE. TAPE SHALL BE APPLIED TO PIPE, CONDUIT, OR COVERING. VALVES, CONTROLS, AND DAMPERS SHALL BE IDENTIFIED BY 2–INCH LACQUERED BRASS TAGS WITH STAMPED LETTERS FASTENED WITH "S" HOOKS OR CHAINS. EQUIPMENT IS TO BE IDENTIFIED AS TO FUNCTION AND PURPOSE BY MEANS OF PERMANENTLY ATTACHED LAMINATED PHENOLIC NAMEPLATES WITH BEVELED EDGES AND WHITE LETTERS ON BLACK BACKGROUND.
10. AT THE CONCLUSION OF THE WORK, ALL EQUIPMENT AND SYSTEMS SHALL BE CAREFULLY BALANCED, ADJUSTED, AND TESTED TO PROVIDE BALANCED, QUIET–OPERATING, STABLE AND SAFE SYSTEMS. DEMONSTRATE OPERATION OF ALL SYSTEMS TO THE OWNER'S DESIGNATED REPRESENTATIVE.

PLUMBING

1. DOMESTIC WATER PIPING

PEX, CPVC, OR TYPE "L" HARD TEMPER COPPER, WROUGHT FITTINGS, LEAD–FREE SOLDERED (ABOVE GROUND). (PER ORDINANCE OF AUTHORITY HAVING JURISDICTION).

PEX, PVC, CPVC OR TYPE "L" HARD TEMPER COPPER UNDER GROUND.

NOTE: DI–ELECTRIC FITTINGS SHALL BE USED WHEREVER DISSIMILAR METALS ARE JOINED. ALL UNDERGROUND/SLAB COPPER PIPING SHALL BE SLEEVED.

2. CONDENSATE DRAIN PIPING:

PVC, ABS, PEX, CPVC OR TYPE "M" HARD TEMPER COPPER, WROUGHT FITTINGS.

3. SANITARY, WASTE, VENT, AND STORM WATER PIPING

ABS IAMPO (1S 11–87) OR PVC IAMPO (1S 9–90) FOR DRAIN WASTE & VENT PIPING & FITTINGS EXCEPT ON STRUCTURES OVER 3 STORIES OR WHERE PROHIBITED BY LOCAL CODE.

4. PLUMBING FIXTURES

PROVIDE CP ANGLE STOPS TO EACH PLUMBING FIXTURE. PROVIDE SHUT–OFF VALVES WITH UNIONS TO ALL OTHER PLUMBING FIXTURES (SUCH AS WATER HEATER) TO FACILITATE ISOLATION FOR REPAIR.

ALL PLUMBING FIXTURES SHALL COMPLY WITH WATER CONSERVATION CODE OF AUTHORITY HAVING JURISDICTION..

DISINFECT ALL POTABLE WATER SYSTEMS IN ACCORDANCE WITH PLUMBING CODE AND/OR AWWA STANDARD. PROVIDE WRITTEN CONFIRMATION TO OWNER'S REPRESENTATIVE THAT THIS WORK HAS BEEN COMPLETED.

5. GAS PIPING

SCHEDULE 40 BLACK STEEL, THREADED MALLEABLE FITTINGS INSIDE, AND GALVANIZED FITTINGS AND PIPE WHERE EXPOSED. PROVIDE ISOLATION VALVES AT ALL EQUIPMENT.

SUPPORT PIPING FROM ROOF ON 4 X 4 REDWOOD RUNNERS AT 8'–0" O.C. (MAX), AND AT EVERY CHANGE OF DIRECTION. USE UNISTRUT "L" STRAPS BOLTED TO RUNNERS.

PLASTIC PIPE SHALL BE INSTALLED OUTDOORS UNDERGROUND ONLY. PLASTIC PIPE SHALL NOT BE USED WITHIN OR UNDER ANY BUILDING OR SLAB OR BE OPERATED AT PRESSURES GREATER THAN 100 PSIG (689 kPa) FOR NATURAL GAS.

PLUMBING FIXTURE SCHEDULE

MARK	FIXTURE	MANUFACTURER/ MODEL	ROUGH–IN SIZES					REMARKS
			CW	HW	SAN	VENT	GAS	
WC	WATER CLOSET	BY OWNER	1/2"	–	3"	2"	–	OWNER SUPPLIED AND CONTRACTOR INSTALLED. MAX. FLOW : 1.6 GAL./FLUSH
LAV	LAVATORY	BY OWNER	1/2"	1/2"	2"	1–1/2"	–	SELF RIMMING LAVATORY OWNER SUPPLIED AND CONTRACTOR INSTALLED. MAX. FLOW : 2.2 GPM
SHWR	SHOWER	BY OWNER	1/2"	1/2"	2"	1 1/2"	–	OWNER SUPPLIED AND CONTRACTOR INSTALLED. MAX. FLOW : 2.5 GPM
BT	BATH TUB	BY OWNER	1/2"	1/2"	2"	1 1/2"	–	OWNER SUPPLIED AND CONTRACTOR INSTALLED. MAX. FLOW : 2.5 GPM
KS	KITCHEN SINK	BY OWNER	1/2"	1/2"	2"	1–1/2"	–	OWNER SUPPLIED AND CONTRACTOR INSTALLED. MAX. FLOW : 2.2 GPM
CLW	CLOTHES WASHER	BY OWNER	1/2"	1/2"	2"	1 1/2"	–	OWNER SUPPLIED AND CONTRACTOR INSTALLED.
S–1	LAUNDRY SINK	BY OWNER	1/2"	1/2"	2"	1 1/2"	–	OWNER SUPPLIED AND CONTRACTOR INSTALLED. MAX. FLOW : 2.2 GPM
S–2	SINK	BY OWNER	1/2"	1/2"	2"	1 1/2"	–	OWNER SUPPLIED AND CONTRACTOR INSTALLED. MAX. FLOW : 2.2 GPM
BS–1,2	BAR SINK	BY OWNER	1/2"	1/2"	2"	1 1/2"	–	OWNER SUPPLIED AND CONTRACTOR INSTALLED. MAX. FLOW : 2.2 GPM
REF	REFRIGERATOR	BY OWNER	1/2"	–	–	–	–	OWNER SUPPLIED AND CONTRACTOR INSTALLED.
HB	HOSE BIBB	BY OWNER	1/2"	–	–	–	–	OWNER SUPPLIED AND CONTRACTOR INSTALLED.

WASTE CALCULATION

MARK	DESCRIPTION	QUANTITY	UNITS PER FIXTURE	TOTAL
WC + LAV + SHWR(BT)	FULL–BATH GROUP	5	5.0	25.0
WC + LAV	HALF–BATH GROUP	1	4.0	4.0
KS + DW	KITCHEN GROUP (KS + DW)	2	2.0	4.0
DW	DISHWASHER	1	2.0	2.0
CLW + S–1	LAUNDRY GROUP (CLW + S–1)	1	3.0	3.0
CLW	CLOTHES WASHER	1	2.0	2.0
S–2	SINK	1	2.0	2.0
BS–1,2	BAR SINK	2	2.0	4.0
LAV	LAVATORY	2	1.0	2.0
SHWR	SHOWER	1	2.0	2.0
BT	BATH TUB	1	2.0	2.0
			TOTAL:	52.0

(IRC 2018 CODE, TABLES: P3004.1)

WATER CALCULATION

DEVELOP. LENGTH TO FURTHEST FIXTURE : 242 FT.
EQUIVALENT LENGTH OF RUN: E.L.R. = 1.1 x 242 = 266 FT.
PRESSURE IN MAIN: 60 PSI
TOTAL FIXTURE UNITS: 53.1 FU
TOTAL FLOW: 30.1 GPM
LOSS DUE TO ELEVATION (12 FEET): 5.2 PSI
LOSS DUE TO SPECIAL PLUMBING FIXTURE: 10 PSI
RESIDUAL PRESSURE: 44.8 PSI

WATER FIXTURE UNITS

MARK	DESCRIPTION	QUANTITY	UNITS PER FIXTURE			TOTAL
			HOT	COLD	COMBINED	
WC + LAV + SHWR(BT)	FULL–BATH GROUP	5	1.5	2.7	3.6	18.0
WC + LAV	HALF–BATH GROUP	1	1.5	2.5	2.6	2.6
LAV	LAVATORY	2	0.5	0.5	0.7	1.4
SHWR	SHOWER	1	1.0	1.0	1.4	1.4
BT	BATH TUB	1	1.0	1.0	1.4	1.4
KS + DW	KITCHEN GROUP (KS + DW)	2	1.9	1.0	2.5	5.0
DW	DISHWASHER	1	–	1.0	1.4	1.4
S–2	SINK	1	1.0	1.0	1.4	1.4
BS–1,2	BAR SINK	2	1.0	1.0	1.4	2.8
CLW + S–1	LAUNDRY GROUP (CLW + S–1)	1	1.8	1.8	2.5	2.5
CLW	CLOTHES WASHER	1	1.0	1.0	1.4	1.4
REF /ICE	REFRIG/ICE MAKER	2	–	1.0	1.0	2.0
HB	HOSE BIBB	5	–	2.5	2.5	12.5
					TOTAL:	53.8

* 1" WATER METER TO BE USED. MAX. FLOW RATING .....50 GPM
* 1 1/2" WATER SERVICE PIPE TO BE USED

(IRC 2018 CODE, TABLES: P2903.6; P2903.6(1))

WATER FIXTURE UNIT SIZING

PIPE SIZE	PIPE FLOW	FLUSH TANKS (FU)
1/2"	4.5	1.7
3/4"	15.0	10.5
1"	26.0	38.0
1 1/4"	38.0	80.0
1 1/2"	52.0	136.0
2"	90.0	320.0

(IRC 2018 CODE, TABLE: AP103.3(3); FIGURE: AP103.3(3))

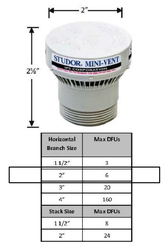

Horizontal Branch Size	Max DFUs
1 1/2"	3
2"	6
3"	20
4"	160
Stack Size	**Max DFUs**
1 1/2"	8
2"	24

MINI-VENT™ Air Admittance Valve

STUDOR VENT DETAIL (8 / P–1)
SCALE: NTS

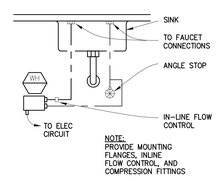

INSTANTANEOUS WH DETAIL (9 / P–1)
NO SCALE

MARK / NUMBER

CIRCULATING PUMP SCHEDULE

SYMBOL	SERVICE	GPM	HEAD (FT. WC)	PUMP SPEED	DRIVE	PUMP MOTOR DATA				MANUFACTURER/ MODEL NUMBER OR EQUAL	REMARKS
						VOLTAGE	AMPS	PHASE	HP		
CP 1,2	HWR	3	10	3000	DIRECT	115 V/60 Hz	0.58	1	1/25	ARMSTRONG PUMPS ASTRO 25 BU	1

NOTES 1. HWR – HOT WATER RETURN

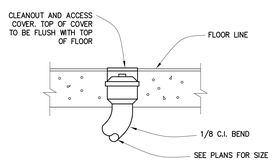

GRADE CLEANOUT (GCO) (6 / P–1)
SCALE: NONE

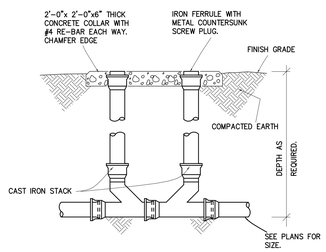

2–WAY CLEANOUT DETAIL (7 / P–1)
NO SCALE

MARK / NUMBER

INSTANTANEOUS WATER HEATER SCHEDULE

SYMBOL	ELECTRICAL				MANUFACTURER/ MODEL NUMBER OR EQUAL	REMARKS
	AMPS	ELEMENT KW	VOLTAGE	PHASE		
WH 3	14	2.9	208	1	STIEBEL ELTRON DHC 4–2	INSTANTANEOUS WH SERVINGS SINK

MARK / NUMBER

GAS WATER HEATER SCHEDULE

SYMBOL	MINIMUM STORAGE (GALLONS)	MINIMUM RECOVERY (GPH AT 90°F RISE)	TYPE OF GAS	GAS INPUT (MBH)	VENT SIZE INPUT	WATER CONN.	TER. EFF.	SL (MBH)	SHIP. WT. (LBs)	MANUFACTURER/ MODEL NUMBER OR EQUAL	REMARKS
GWH 1	50.0	129	NAT./ PROP.	100.0	3"	3/4"	0.96	N/A	255	A.O. SMITH / GDHE–50	3/4" T&P RELIEF PIPE DOWN AND ROUTE THRU A WALL TO DAYLIGHT AND TERMINATE AT 6" A.F.F.
GWH 2	50.0	129	NAT./ PROP.	100.0	3"	3/4"	0.96	N/A	255	A.O. SMITH / GDHE–50	3/4" T&P RELIEF PIPE DOWN AND ROUTE THRU A WALL TO DAYLIGHT AND TERMINATE AT 6" A.F.F.

CITY OF PHOENIX
Planning and Development Department
BY: Justine Cornelius
05/11/2023
This set of plans has been reviewed for PHOENIX CONSTRUCTION CODE requirements prior to issuance of Building Permit and shall be kept at the construction site. Such review shall not prevent the Building Official from requiring correction of errors in the plans where such errors are subsequently found to be in violation of any law or ordinance.

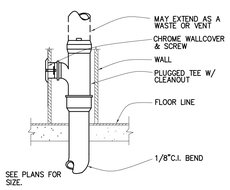

WALL CLEANOUT DETAIL (1 / P–1)
NO SCALE

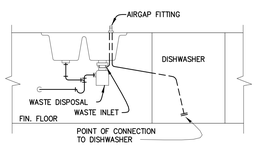

KITCHEN SINK/DISHWASHER SANITARY (2 / P–1)
SCALE: NONE

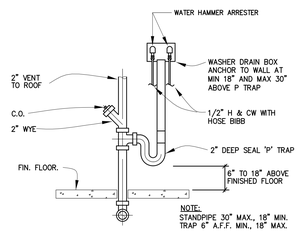

CLOTHES WASHER STANDPIPE (3 / P–1)
SCALE: NONE

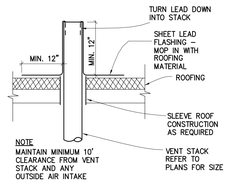

VENT THRU ROOF DETAIL (4 / P–1)
NO SCALE

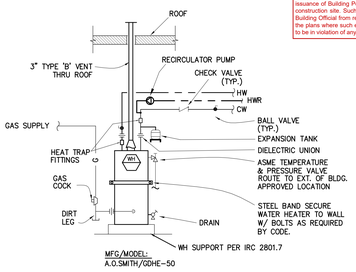

GAS WATER HEATER DETAIL (5 / P–1)
NO SCALE

MG ENGINEERING, LLC
Voice: (602) 758 6088
Fax: (602) 266 2534
Email: mgrbic@mgmech.com

Electronic copy of final design document originally sealed by registered mechanical engineer. There shall be no deviation from these drawings or any accompanying specifications without written consent of the engineer.

PROJECT NUMBER: MG22–04

THE INFORMATION CONTAINED ON THESE DRAWINGS SUCH AS DATA, DESIGNS, AND CONCEPTS, ARE PROPERTY OF ProCaDesign AND SHALL NOT BE USED FOR ANY OTHER PURPOSE OTHER THAN ORIGINALLY INTENDED WITHOUT WRITTEN PERMISSION OF THE DESIGNER/CONSULTANT.

#	REVISIONS	DATE

ProCaDesign LLC

JOKAKE RESIDENCE
4441 N JOKAKE DR
SCOTTSDALE AZ 85251

DRAWN BY: ProCaDesign
CONTACT #
www.procadesign.net
(602) 606-2885
angelica@procadesign.com

DATE: 12/10/2020
SCALE: AS SHOWN
NAME SHEET: PLUMBING SPECIFICATIONS, DETAILS AND SCHEDULES
SHEET: P1

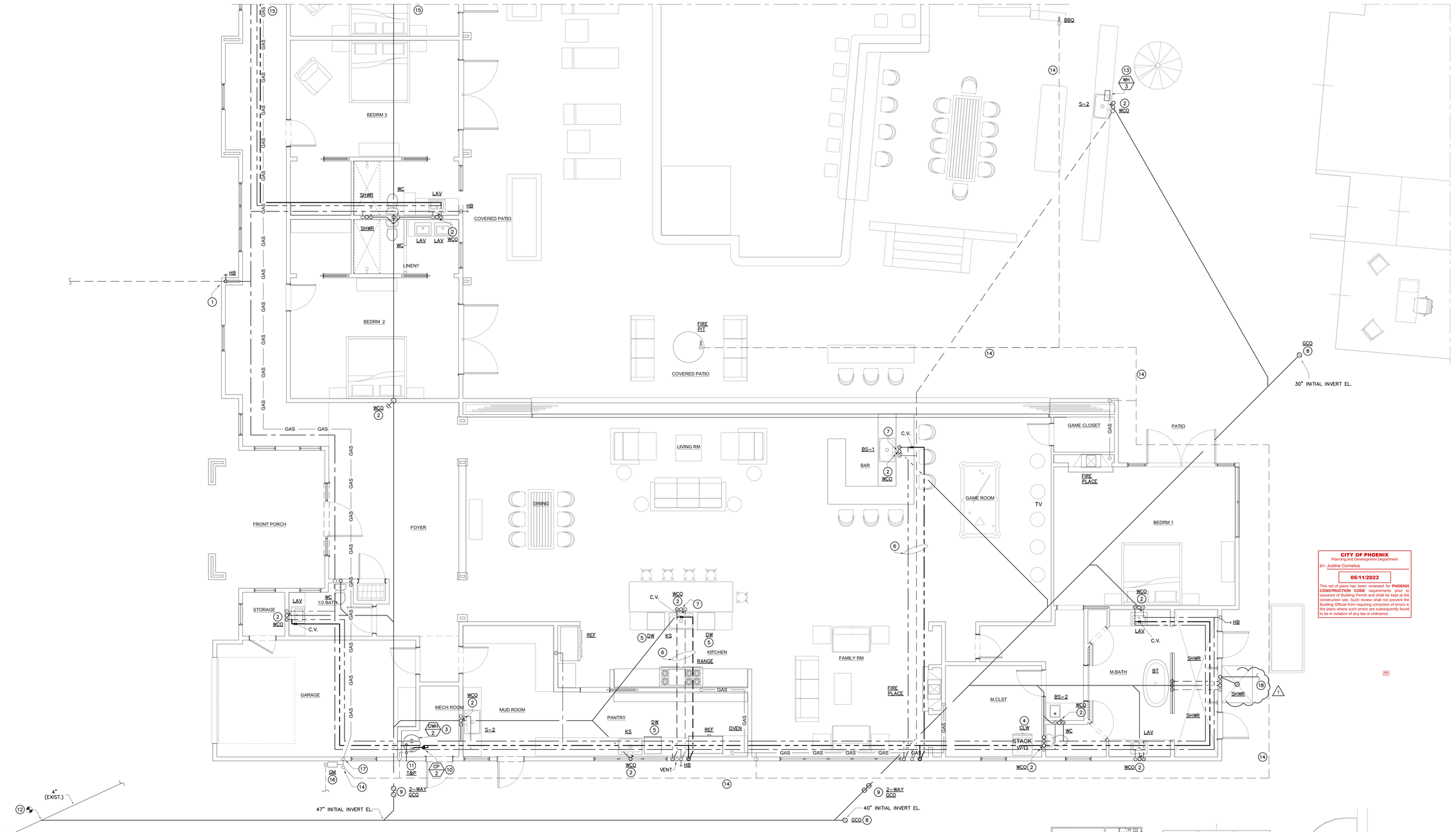

NORTH

ENLARGED PLUMBING FLOOR PLAN (A / P-2.0)

SCALE: 1/4" = 1' - 0"

KEY NOTES:

1. 1 1/2" COLD WATER LINE UP TO CEILING SPACE AND ROUTE AS SHOWN ON PLAN. FOR WATER CALCULATIONS REFER TO P-1 SHEET.
2. WALL CLEAN OUT. REFER TO DETAIL 1/P-1.
3. GAS WATER HEATER LOCATION. FOR INSTALLATION, REFER TO DETAIL 5/P-1 SHEET. FOR MODEL REFER TO SCHEDULE ON SAME SHEET.
4. CLOTHES WASHER LOCATION. FOR CLOTHES WASHER STANDPIPE REFER TO DETAIL 3/P-1.
5. DISHWASHER LOCATION. REFER TO DETAIL 2/P-1.
6. 1/2" CW/HW/HWR ROUTE UNDERNEATH FLOOR TO ISLAND SINK.
7. STUDOR MINI-VENT. REFER TO DETAIL 8/P-1.
8. GRADE CLEAN OUT. REFER TO DETAIL 6/P-1.
9. 2-WAY CLEAN-OUT. REFER TO DETAIL 7/P-1.
10. CIRCULATING PUMP LOCATION. FOR MODEL REFER TO SCHEDULE ON P-1. INSTALL AS PER MANUFACTURER'S INSTRUCTIONS. CONTROL WILL SHUT OFF OPERATION OF CIRCULATING PUMP WITHIN 10 MIN AFTER END OF HEATING CYCLE.
11. 3/4" T&P DRAIN DOWN, FROM WATER HEATER IN WALL AND OUTSIDE TO DAY LIGHT AT 6" A.F.G.
12. CONNECT NEW 4" SEWER LINE TO EXISTING 4" ONE.
13. INSTANTANEOUS WATER HEATER LOCATION. FOR INSTALLATION REFER TO DETAIL 9/P-1. FOR MODEL REFER TO SCHEDULE ON P-1.
14. 3" GAS LINE DOWN AND ROUTE UNDERGROUND AS SHOWN ON THE PLAN.
15. FOR CONTINUATION SEE P-2.1 SHEET.
16. GAS METER LOCATION.
17. 1" GAS LINE UP TO FIRST FLOOR CEILING SPACE AND ROUTE AS SHOWN ON THE PLAN.
18. OUTDOOR SHOWER TO BE CONNECTED TO LOCAL DRAIN SYSTEM.

GENERAL NOTES:

1. COORDINATE EXACT ROUTING OF HOT/COLD WATER, VENT AND SAN. PIPING WITH ALL TRADES, ROUTING SHOWN IS SCHEMATIC ONLY.
2. VENT PIPING THRU ROOF SHALL MAINTAIN 10'-0" CLEAR OF ALL O/A DUCTS.
3. REFER TO PLUMBING FIXTURE SCHEDULE FOR ANY UNMARKED RUN OUT SIZES.
4. WASTE PIPING SHALL SLOPE:
   - 1/8 INCH PER FOOT FOR PIPING 3 AND 4" IN SIZE,
   - 1/4 INCH PER FOOT FOR PIPING UP TO 2 1/2" IN SIZE.
5. MATERIALS:
   FOR WATER ABOVE GROUND (DISTRIBUTION PIPE):
   CPVC, PEX OR TYPE "L" COPPER TUBING.
   FOR WATER BELOW GROUND (BUILDING SUPPLY PIPE):
   CPVC, PEX OR TYPE "L" COPPER TUBING.
   FOR SANITARY WASTE - PVC, SCH. 40,
   FOR SANITARY VENT - PVC, SCH. 40,
   FOR GAS ABOVE GROUND: BLACK STEEL, SCH. 40.
   FOR GAS OUTDOOR UNDERGROUND ONLY: POLYETHYLENE PLASTIC PIPE.
6. INSULATIONS:
   -HOT WATER PIPES SHALL BE INSULATED WITH 1" INSULATION THICKNESS AS PER IECC 2018, TABLE R403.4.2.
7. FOR WATER, WASTE AND GAS CALCULATION, IRC 2018 USED.

NORTH

OVERALL PLAN (B / P-2.0)

SCALE: 1/16" = 1' - 0"

CITY OF PHOENIX
Planning and Development Department
BY: Justine Cornelius
05/11/2023
This set of plans has been reviewed for **PHOENIX CONSTRUCTION CODE** requirements prior to issuance of Building Permit and shall be kept at the construction site. Such review shall not prevent the Building Official from requiring correction of errors in the plans where such errors are subsequently found to be in violation of any law or ordinance.

1 CITY COMMENTS 12-10-2022

Registered Professional Engineer (Mechanical) CERTIFICATE NO. 72554 BOJAN GRBIC Date Signed 02-10-22 ARIZONA, U.S.A. EXPIRES 03.31.2023

MG ENGINEERING, LLC
Voice: (602) 758 6088
Fax: (602) 266 2534
Email: engrg@mgmech.com

Electronic copy of final design document originally sealed by registered mechanical engineer. There shall be no deviation from these drawings or any accompanying specifications without written consent of the engineer.

PROJECT NUMBER: MG22-04

PROCADESIGN LLC

THE INFORMATION CONTAINED ON THESE DRAWINGS SUCH AS DATA, DESIGNS, AND CONCEPTS, ARE PROPERTY OF PROCADESIGN LLC AND MAY NOT BE USED FOR ANY OTHER PURPOSE OTHER THAN ORIGINALLY INTENDED WITHOUT WRITTEN PERMISSION OF THE DESIGNER/CONSULTANT.

#	REVISIONS	DATE

JOKAKE RESIDENCE
4441 N JOKAKE DR
SCOTTSDALE AZ 85251

DRAWN BY: ProCADesign
CONTACT #
www.procadesign.net
(602) 606-2885
angelica@procadesign.com
DATE: 12/10/2020
SCALE: AS SHOWN
NAME SHEET: PLUMBING FLOOR PLAN
SHEET: P2.0

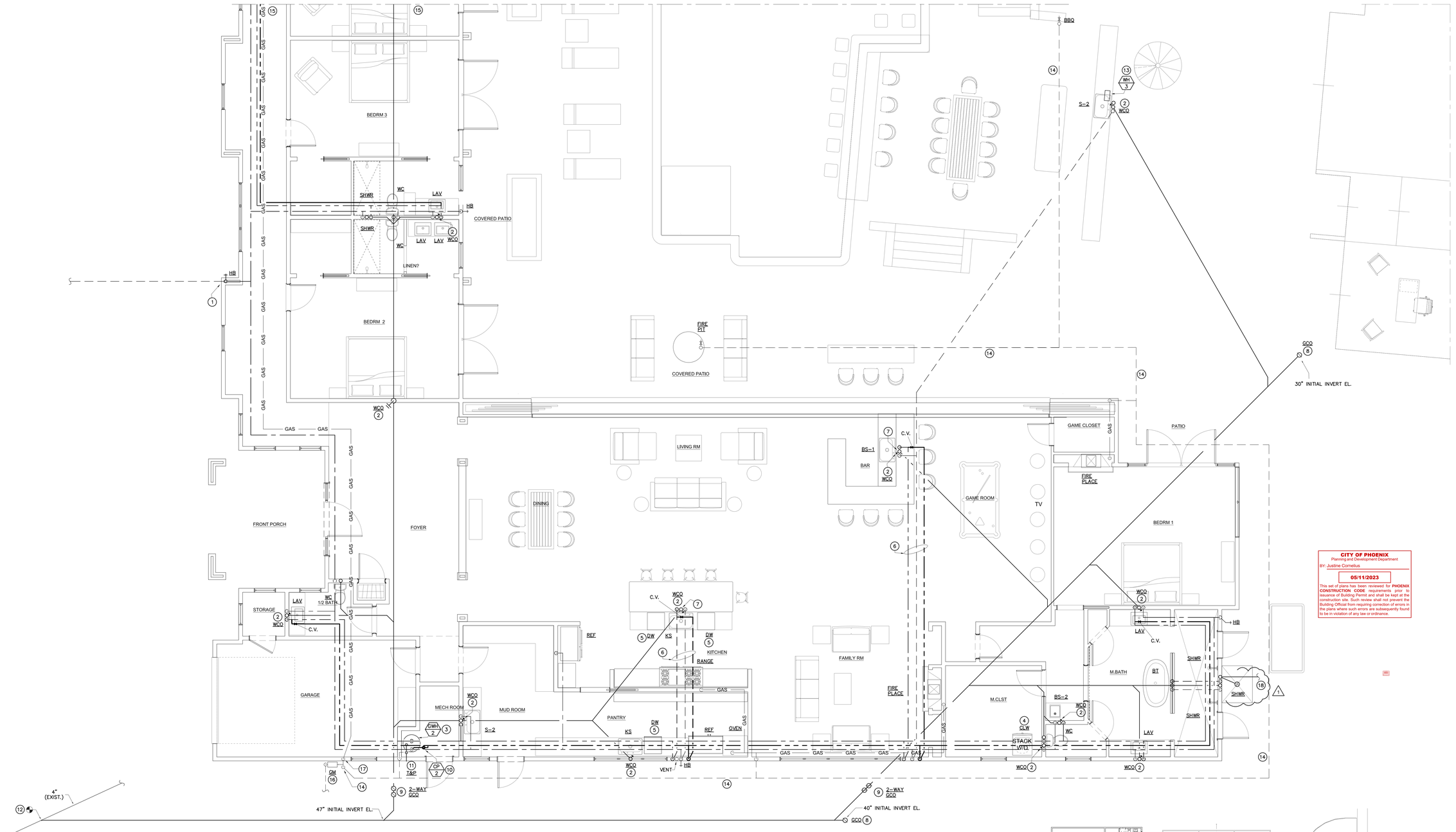

NORTH

ENLARGED PLUMBING FLOOR PLAN (A / P-2.0)

SCALE: 1/4" = 1' - 0"

NORTH

OVERALL PLAN (B / P-2.0)

SCALE: 1/16" = 1' - 0"

KEY NOTES:

1. 1 1/2" COLD WATER LINE UP TO CEILING SPACE AND ROUTE AS SHOWN ON PLAN. FOR WATER CALCULATIONS REFER TO P-1 SHEET.
2. WALL CLEAN OUT. REFER TO DETAIL 1/P-1.
3. GAS WATER HEATER LOCATION. FOR INSTALLATION, REFER TO DETAIL 5/P-1 SHEET. FOR MODEL REFER TO SCHEDULE ON SAME SHEET.
4. CLOTHES WASHER LOCATION. FOR CLOTHES WASHER STANDPIPE REFER TO DETAIL 3/P-1.
5. DISHWASHER LOCATION. REFER TO DETAIL 2/P-1.
6. 1/2" CW/HW/HWR ROUTE UNDERNEATH FLOOR TO ISLAND SINK.
7. STUDOR MINI-VENT. REFER TO DETAIL 8/P-1.
8. GRADE CLEAN OUT. REFER TO DETAIL 6/P-1.
9. 2-WAY CLEAN-OUT. REFER TO DETAIL 7/P-1.
10. CIRCULATING PUMP LOCATION. FOR MODEL REFER TO SCHEDULE ON P-1. INSTALL AS PER MANUFACTURER'S INSTRUCTIONS. CONTROL WILL SHUT OFF OPERATION OF CIRCULATING PUMP WITHIN 10 MIN AFTER END OF HEATING CYCLE.
11. 3/4" T&P DRAIN DOWN, FROM WATER HEATER IN WALL AND OUTSIDE TO DAY LIGHT AT 6" A.F.G.
12. CONNECT NEW 4" SEWER LINE TO EXISTING 4" ONE.
13. INSTANTANEOUS WATER HEATER LOCATION. FOR INSTALLATION REFER TO DETAIL 9/P-1. FOR MODEL REFER TO SCHEDULE ON P-1.
14. 3" GAS LINE DOWN AND ROUTE UNDERGROUND AS SHOWN ON THE PLAN.
15. FOR CONTINUATION SEE P-2.1 SHEET.
16. GAS METER LOCATION.
17. 1" GAS LINE UP TO FIRST FLOOR CEILING SPACE AND ROUTE AS SHOWN ON THE PLAN.
18. OUTDOOR SHOWER TO BE CONNECTED TO LOCAL DRAIN SYSTEM.

GENERAL NOTES:

1. COORDINATE EXACT ROUTING OF HOT/COLD WATER, VENT AND SAN. PIPING WITH ALL TRADES, ROUTING SHOWN IS SCHEMATIC ONLY.
2. VENT PIPING THRU ROOF SHALL MAINTAIN 10'-0" CLEAR OF ALL O/A DUCTS.
3. REFER TO PLUMBING FIXTURE SCHEDULE FOR ANY UNMARKED RUN OUT SIZES.
4. WASTE PIPING SHALL SLOPE:
   - 1/8 INCH PER FOOT FOR PIPING 3 AND 4" IN SIZE,
   - 1/4 INCH PER FOOT FOR PIPING UP TO 2 1/2" IN SIZE.
5. MATERIALS:
   FOR WATER ABOVE GROUND (DISTRIBUTION PIPE):
   CPVC, PEX OR TYPE "L" COPPER TUBING.
   FOR WATER BELOW GROUND (BUILDING SUPPLY PIPE):
   CPVC, PEX OR TYPE "L" COPPER TUBING.
   FOR SANITARY WASTE - PVC, SCH. 40,
   FOR SANITARY VENT - PVC, SCH. 40,
   FOR GAS ABOVE GROUND: BLACK STEEL, SCH. 40.
   FOR GAS OUTDOOR UNDERGROUND ONLY: POLYETHYLENE PLASTIC PIPE.
6. INSULATIONS:
   -HOT WATER PIPES SHALL BE INSULATED WITH 1" INSULATION THICKNESS AS PER IECC 2018, TABLE R403.4.2.
7. FOR WATER, WASTE AND GAS CALCULATION, IRC 2018 USED.

CITY OF PHOENIX
Planning and Development Department
BY: Justine Cornelius
05/11/2023
This set of plans has been reviewed for **PHOENIX CONSTRUCTION CODE** requirements prior to issuance of Building Permit and shall be kept at the construction site. Such review shall not prevent the Building Official from requiring correction of errors in the plans where such errors are subsequently found to be in violation of any law or ordinance.

1 CITY COMMENTS 12-10-2022

Registered Professional Engineer (Mechanical) CERTIFICATE NO. 72554 BOJAN GRBIC Date Signed 02-14-22 ARIZONA, U.S.A. EXPIRES 03.31.2023

MG ENGINEERING, LLC
Voice: (602) 758 6088
Fax: (602) 266 2534
Email: engrg@mgmech.com

Electronic copy of final design document originally sealed by registered mechanical engineer. There shall be no deviation from these drawings or any accompanying specifications without written consent of the engineer.

PROJECT NUMBER: MG22-04

PROCADESIGN LLC

THE INFORMATION CONTAINED ON THESE DRAWINGS SUCH AS DATA, DESIGNS, AND CONCEPTS, ARE PROPERTY OF PROCADESIGN LLC AND MAY NOT BE USED FOR ANY OTHER PURPOSE OTHER THAN ORIGINALLY INTENDED WITHOUT WRITTEN PERMISSION OF THE DESIGNER/CONSULTANT.

#	REVISIONS	DATE

JOKAKE RESIDENCE
4441 N JOKAKE DR
SCOTTSDALE AZ 85251

DRAWN BY: ProCADesign
CONTACT #
www.procadesign.net
(602) 606-2885
angelica@procadesign.com
DATE: 12/10/2020
SCALE: AS SHOWN
NAME SHEET: PLUMBING FLOOR PLAN
SHEET: P2.0

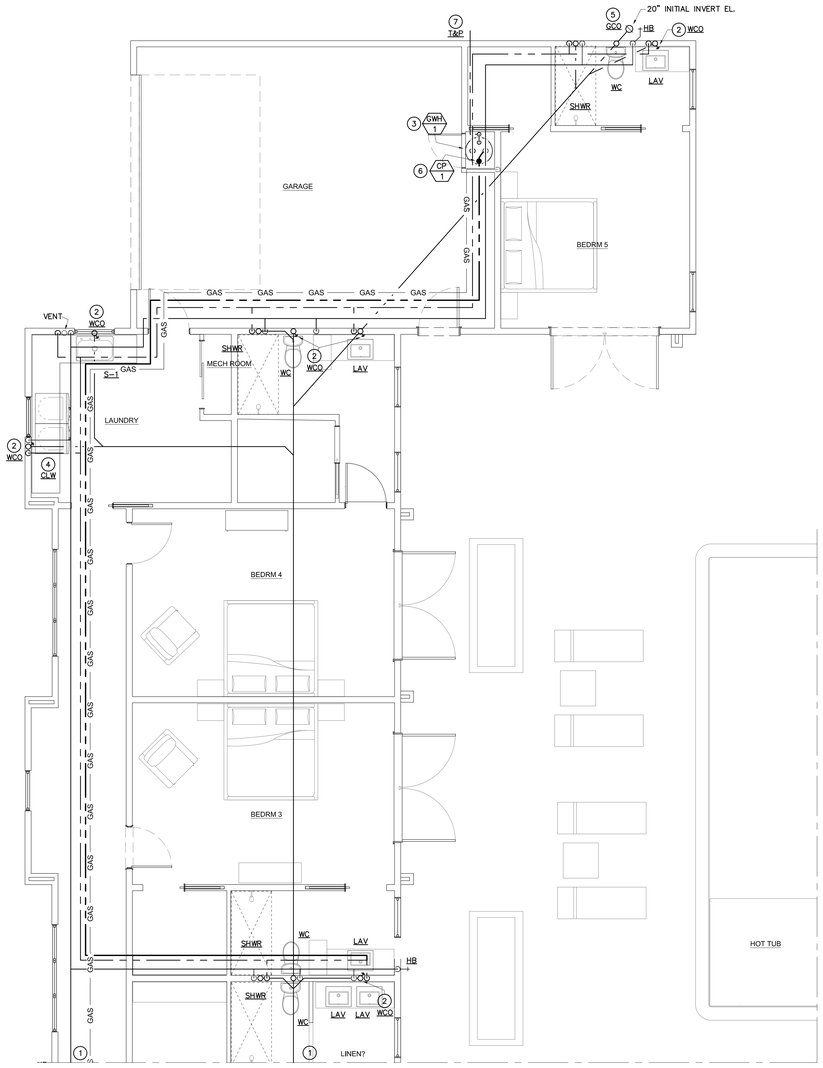

NORTH ENLARGED PLUMBING FLOOR PLAN (A / P-2.1)
SCALE: 1/4" = 1' - 0"

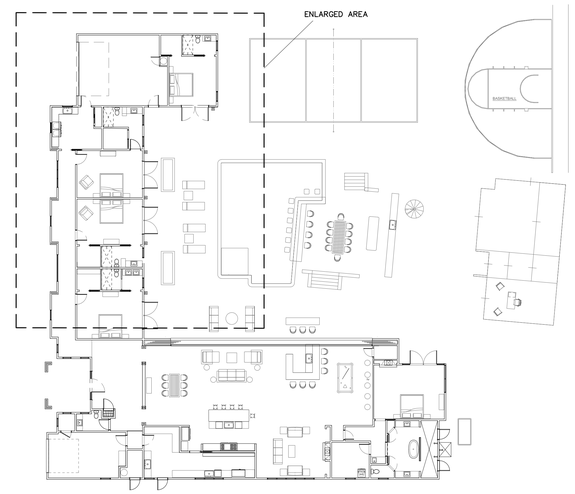

NORTH OVERALL PLAN (B / P-2.1)
SCALE: 1/16" = 1' - 0"

KEY NOTES:

1. FOR CONTINUATION SEE P-2.0 SHEET.
2. WALL CLEAN OUT. REFER TO DETAIL 1/P-1.
3. GAS WATER HEATER LOCATION. FOR INSTALLATION, REFER TO DETAIL 5/P-1 SHEET. FOR MODEL REFER TO SCHEDULE ON SAME SHEET.
4. CLOTHES WASHER LOCATION. FOR CLOTHES WASHER STANDPIPE REFER TO DETAIL 3/P-1.
5. GRADE CLEAN OUT. REFER TO DETAIL 6/P-1.
6. CIRCULATING PUMP LOCATION. FOR MODEL REFER TO SCHEDULE ON P-1. INSTALL AS PER MANUFACTURER'S INSTRUCTIONS. CONTROL WILL SHUT OFF OPERATION OF CIRCULATING PUMP WITHIN 10 MIN AFTER END OF HEATING CYCLE.
7. 3/4" T&P DRAIN DOWN, FROM WATER HEATER IN WALL AND OUTSIDE TO DAY LIGHT AT 6" A.F.G.

GENERAL NOTES:

1. COORDINATE EXACT ROUTING OF HOT/COLD WATER, VENT AND SAN. PIPING WITH ALL TRADES, ROUTING SHOWN IS SCHEMATIC ONLY.
2. VENT PIPING THRU ROOF SHALL MAINTAIN 10'-0" CLEAR OF ALL O/A DUCTS.
3. REFER TO PLUMBING FIXTURE SCHEDULE FOR ANY UNMARKED RUN OUT SIZES.
4. WASTE PIPING SHALL SLOPE:
   - 1/8 INCH PER FOOT FOR PIPING 3 AND 4" IN SIZE,
   - 1/4 INCH PER FOOT FOR PIPING UP TO 2 1/2" IN SIZE.
5. MATERIALS:
   FOR WATER ABOVE GROUND (DISTRIBUTION PIPE): CPVC, PEX OR TYPE "L" COPPER TUBING.
   FOR WATER BELOW GROUND (BUILDING SUPPLY PIPE): CPVC, PEX OR TYPE "L" COPPER TUBING.
   FOR SANITARY WASTE - PVC, SCH. 40,
   FOR SANITARY VENT - PVC, SCH. 40,
   FOR GAS ABOVE GROUND: BLACK STEEL, SCH. 40.
   FOR GAS OUTDOOR UNDERGROUND ONLY: POLYETHYLENE PLASTIC PIPE.
6. INSULATIONS:
   -HOT WATER PIPES SHALL BE INSULATED WITH 1" INSULATION THICKNESS AS PER IECC 2018, TABLE R403.4.2.
7. FOR WATER, WASTE AND GAS CALCULATION, IRC 2018 USED.

CITY OF PHOENIX
Planning and Development Department
BY: Justine Cornelius
05/11/2023
This set of plans has been reviewed for **PHOENIX CONSTRUCTION CODE** requirements prior to issuance of Building Permit and shall be kept at the construction site. Such review shall not prevent the Building Official from requiring correction of errors in the plans where such errors are subsequently found to be in violation of any law or ordinance.

Bojan Gribic
Registered Professional Engineer (Mechanical)
CERTIFICATE NO. 72554
BOJAN GRIBIC
Date Signed 02-14-22
ARIZONA, U.S.A.
EXPIRES: 03.31.2024

MG ENGINEERING, LLC
Voice: (602) 758 6088
Fax: (602) 266 2534
Email: engrs@mgmech.com

Electronic copy of final design document originally sealed by registered mechanical engineer. There shall be no deviation from these drawings or any accompanying specifications without written consent of the engineer.

PROJECT NUMBER: MG22-04

PROCADESIGN LLC

THE INFORMATION CONTAINED ON THESE DRAWINGS SUCH AS DATA, DESIGNS, AND CONCEPTS, ARE PROPERTY OF PROCADESIGN LLC AND SHALL NOT BE USED FOR ANY OTHER PURPOSE OTHER THAN ORIGINALLY INTENDED WITHOUT WRITTEN PERMISSION OF THE DESIGNER/CONSULTANT.

#	REVISIONS	DATE

JOKAKE RESIDENCE
4441 N JOKAKE DR
SCOTTSDALE AZ 85251

DRAWN BY: ProCaDesign
CONTACT #
www.procadesign.net
(602) 606-2885
angelica@procadesign.com
DATE: 12/10/2020
SCALE: AS SHOWN
NAME SHEET: PLUMBING FLOOR PLAN
SHEET: P2.1

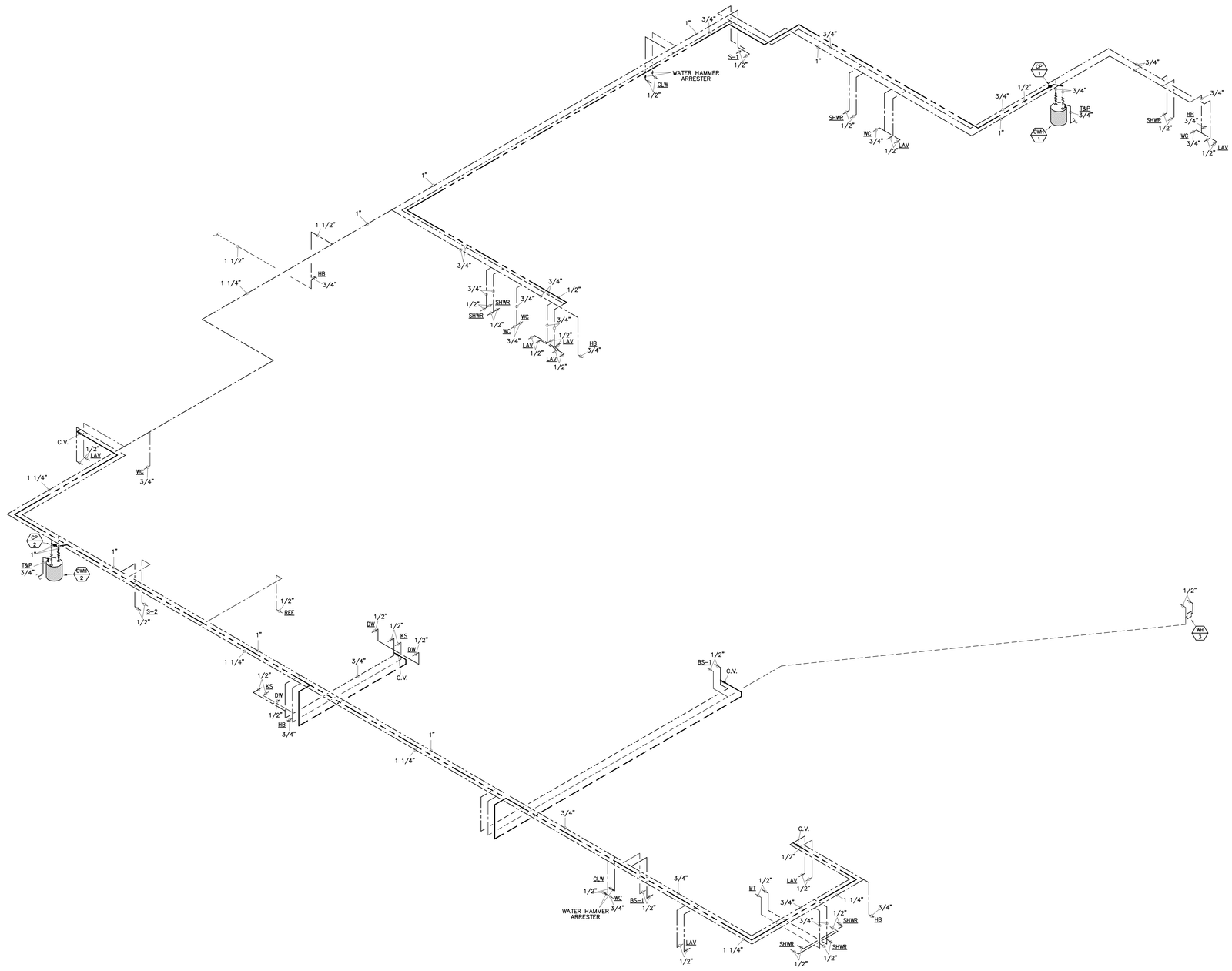

CW/HW ISOMETRICS

NO SCALE

A
P-3.0

CITY OF PHOENIX
Planning and Development Department

BY: Justine Cornelius

05/11/2023

This set of plans has been reviewed for **PHOENIX CONSTRUCTION CODE** requirements prior to issuance of Building Permit and shall be kept at the construction site. Such review shall not prevent the Building Official from requiring correction of errors in the plans where such errors are subsequently found to be in violation of any law or ordinance.

Registered Professional Engineer (Mechanical)
CERTIFICATE NO. 72554
BOJAN GRBIC
Date Signed 04-14-22
ARIZONA, U.S.A.

MG
Voice: (602) 756 6088
Fax: (602) 266 2534
Email: engr@mgmech.com
ENGINEERING, LLC

Electronic copy of final design document originally sealed by registered mechanical engineer. There shall be no deviation from these drawings or any accompanying specifications without written consent of the engineer.

PROJECT NUMBER: MG22-04

PROCADESIGN LLC

THE INFORMATION CONTAINED ON THESE DRAWINGS SUCH AS DATA, DESIGNS, AND CONCEPTS, ARE PROPERTY OF PROCADESIGN LLC AND WILL NOT BE USED FOR ANY OTHER PURPOSE OTHER THAN ORIGINALLY INTENDED WITHOUT WRITTEN PERMISSION OF THE DESIGNER/CONSULTANT.

#	REVISIONS	DATE

JOKAKE RESIDENCE
4441 N JOKAKE DR
SCOTTSDALE AZ 85251

DRAWN BY: ProCaDesign

CONTACT #
www.procadesign.net
(602) 606-2885
angelica@procadesign.com

DATE: 12/10/2020

SCALE: AS SHOWN

NAME SHEET: PLUMBING ISOMETRICS

SHEET: P3.0

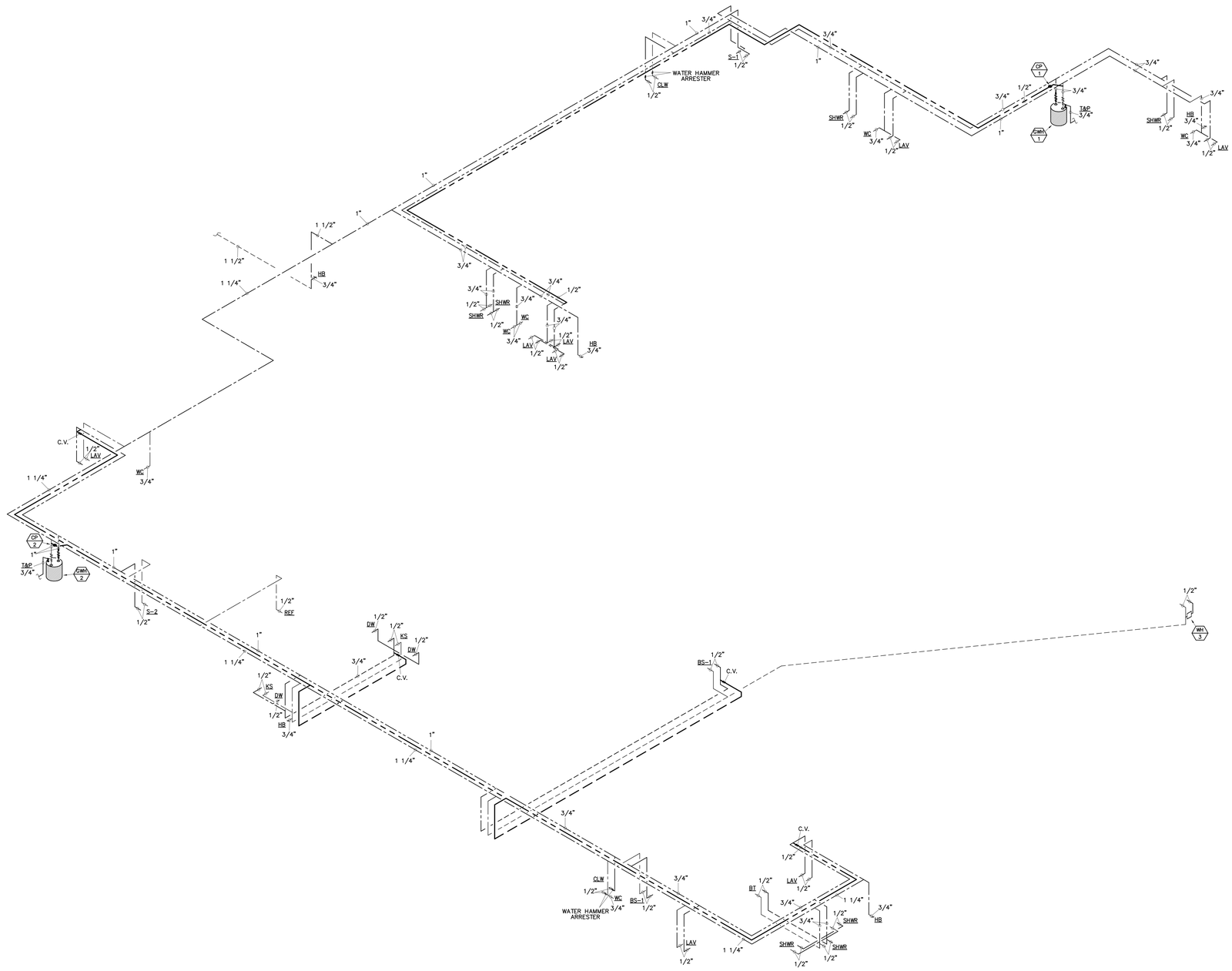

CW/HW ISOMETRICS

NO SCALE

A
P-3.0

CITY OF PHOENIX
Planning and Development Department
BY: Justine Cornelius
05/11/2023
This set of plans has been reviewed for **PHOENIX CONSTRUCTION CODE** requirements prior to issuance of Building Permit and shall be kept at the construction site. Such review shall not prevent the Building Official from requiring correction of errors in the plans where such errors are subsequently found to be in violation of any law or ordinance.

Brian Lulie
Registered Professional Engineer (Mechanical)
CERTIFICATE NO. 72554
BRIAN GRBIC
Date Signed 04-04-22
ARIZONA, U.S.A.
EXPIRES: 03.31.2024

MG Voice: (602) 756 6088
Fax: (602) 266 2534
Email: engr@mgmech.com
ENGINEERING, LLC

Electronic copy of final design document originally sealed by registered mechanical engineer. There shall be no deviation from these drawings or any accompanying specifications without written consent of the engineer.

PROJECT NUMBER: MG22-04

PROCADESIGN LLC

THE INFORMATION CONTAINED ON THESE DRAWINGS SUCH AS DATA, DESIGNS, AND CONCEPTS, ARE PROPERTY OF PROCADESIGN LLC AND WILL NOT BE USED FOR ANY OTHER PURPOSE OTHER THAN ORIGINALLY INTENDED WITHOUT WRITTEN PERMISSION OF THE DESIGNER/CONSULTANT.

#	REVISIONS	DATE

JOKAKE RESIDENCE
4441 N JOKAKE DR
SCOTTSDALE AZ 85251

DRAWN BY: ProCaDesign

CONTACT #
www.procadesign.net
(602) 606-2885
angelica@procadesign.com

DATE: 12/10/2020

SCALE: AS SHOWN

NAME SHEET: PLUMBING ISOMETRICS

SHEET: P3.0

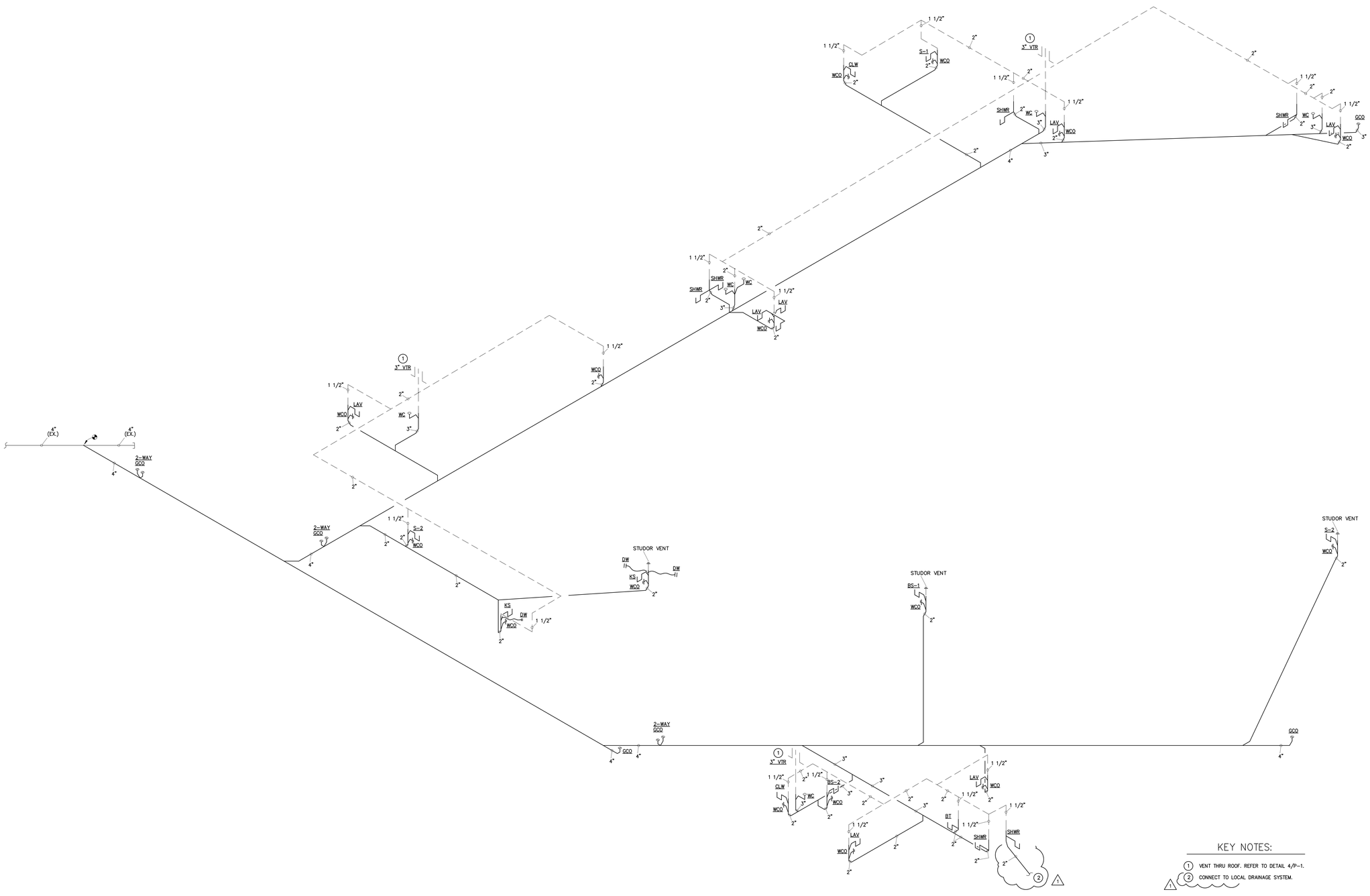

WASTE AND VENT ISOMETRICS

NO SCALE

A
P-3.1

KEY NOTES:

1. VENT THRU ROOF. REFER TO DETAIL 4/P-1.
2. CONNECT TO LOCAL DRAINAGE SYSTEM.

CITY OF PHOENIX
Planning and Development Department
BY: Justine Cornelius
05/11/2023
This set of plans has been reviewed for **PHOENIX CONSTRUCTION CODE** requirements prior to issuance of Building Permit and shall be kept at the construction site. Such review shall not prevent the Building Official from requiring correction of errors in the plans where such errors are subsequently found to be in violation of any law or ordinance.

1 CITY COMMENTS 12-10-2022

Bojan Grbic
Registered Professional Engineer (Mechanical)
CERTIFICATE NO. 72554
BOJAN GRBIC
Date Signed 12-10-22
ARIZONA, U.S.A.
EXPIRES 03.31.2024

MG ENGINEERING, LLC
Voice: (602) 758 6088
Fax: (602) 266 2534
Email: engrs@mgmech.com

Electronic copy of final design document originally sealed by registered mechanical engineer. There shall be no deviation from these drawings or any accompanying specifications without written consent of the engineer.

PROJECT NUMBER: MG22-04

ProCaDesign LLC

THE INFORMATION CONTAINED ON THESE DRAWINGS SUCH AS DATA, DESIGNS, AND CONCEPTS, ARE PROPERTY OF PROCADESIGN LLC AND WILL NOT BE USED FOR ANY OTHER PURPOSE OTHER THAN ORIGINALLY INTENDED WITHOUT WRITTEN PERMISSION OF THE DESIGNER/CONSULTANT.

#	REVISIONS	DATE

JOKAKE RESIDENCE
4441 N JOKAKE DR
SCOTTSDALE AZ 85251

DRAWN BY: ProCaDesign
CONTACT #
www.procadesign.net
(602) 606-2885
angelica@procadesign.com
DATE: 12/10/2020
SCALE: AS SHOWN
NAME SHEET: PLUMBING ISOMETRIC
SHEET: P3.1

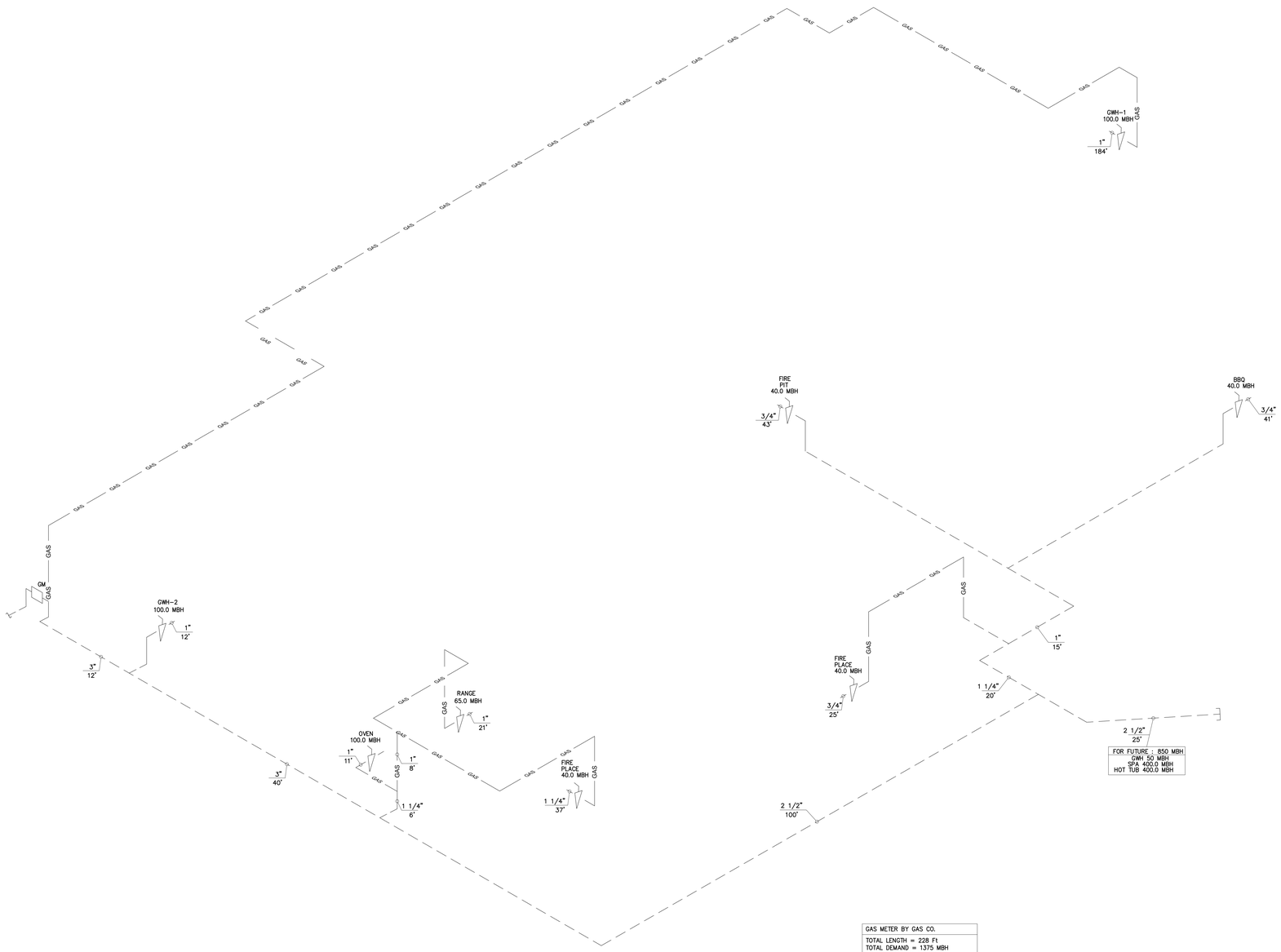

GAS METER BY GAS CO.
TOTAL LENGTH = 228 Ft TOTAL DEMAND = 1375 MBH PIPE SIZING PER IRC 2018
NATURAL GAS 0.60 S.G. INLET PRESSURE = LESS THAN 2 PSI PRESSURE DROP = 0.5 WCI
IRC 2018; TABLE G2413.4(1)

GAS ISOMETRICS

NO SCALE

A
P-3.2

CITY OF PHOENIX
Planning and Development Department
BY: Justine Cornelius

05/11/2023

This set of plans has been reviewed for **PHOENIX CONSTRUCTION CODE** requirements prior to issuance of Building Permit and shall be kept at the construction site. Such review shall not prevent the Building Official from requiring correction of errors in the plans where such errors are subsequently found to be in violation of any law or ordinance.

THE INFORMATION CONTAINED ON THESE DRAWINGS SUCH AS DATA, DESIGNS, AND CONCEPTS, ARE PROPERTY OF PROCADESIGN LLC AND WILL NOT BE USED FOR ANY OTHER PURPOSE OTHER THAN ORIGINALLY INTENDED WITHOUT WRITTEN PERMISSION OF THE DESIGNER/CONSULTANT.

#	REVISIONS	DATE

JOKAKE RESIDENCE
4441 N JOKAKE DR
SCOTTSDALE AZ 85251

Registered Professional Engineer (Mechanical)
CERTIFICATE NO. 72554
BOJAN GRBIC
Date Signed 05-24-22
ARIZONA, U.S.A.
EXPIRES 03-31-2024

MG Voice: (602) 756 6088
Fax: (602) 266 2534
Email: engrg@mgmech.com
ENGINEERING, LLC

Electronic copy of final design document originally sealed by registered mechanical engineer. There shall be no deviation from these drawings or any accompanying specifications without written consent of the engineer.

PROJECT NUMBER: MG22-04

DRAWN BY: ProCaDesign
CONTACT #
www.procadesign.net
(602) 606-2885
angelica@procadesign.com
DATE: 12/10/2020
SCALE: AS SHOWN
NAME SHEET: PLUMBING ISOMETRICS
SHEET: P3.2

DANCO RESIDENCE

4441 N JOKAKE DR SCOTTSDALE AZ 85251

PROJECT DESCRIPTION

NEW SINGLE FAMILY RESIDENCE

OWNER

DANCO HOMES LLC

PROJECT INFORMATION

PROJECT ADDRESS:	4441 N JOKAKE DR SCOTTSDALE AZ 85251
ZONING:	RE-35
JURISDICTION:	PHOENIX
SECTION T.R.:	21 2N 4E
LOT.:	9
PARCEL #:	172-29-017
CONSTRUCTION YEAR:	2022

CITY OF PHOENIX
Planning and Development Department

BY: Alfredo Tadaya

05/17/2023

This set of plans has been reviewed for **Structural** requirements prior to issuance of Building Permit and shall be kept at the construction site. Such review shall not prevent the Building Official from requiring correction of errors in the plans where such errors are subsequently found to be in violation of any law or ordinance.

THIS DRAWING HAS BEEN DRAWN UNDER THE GUIDANCE OF MSD PLLC AND HAS BEEN REVIEWED FOR COMPLIANCE WITH THE STRUCTURAL CALCULATIONS AND CORRECTNESS ONLY. THE SCOPE OF MSD PLLC DOES NOT EXCEED THAT OF THE ACCOMPANYING CALCULATIONS.

Registered Professional Engineer (Structural)
CERTIFICATE NO. 52235
SCOTT E. SEEMAN
DATE SIGNED 12/9/22
ARIZONA, U.S.A.

SHEET: SKO

DATE: 06/14/22

PROJECT: DANCO RESIDENCE
4441 N JOKAKE DR
SCOTTSDALE AZ 85251

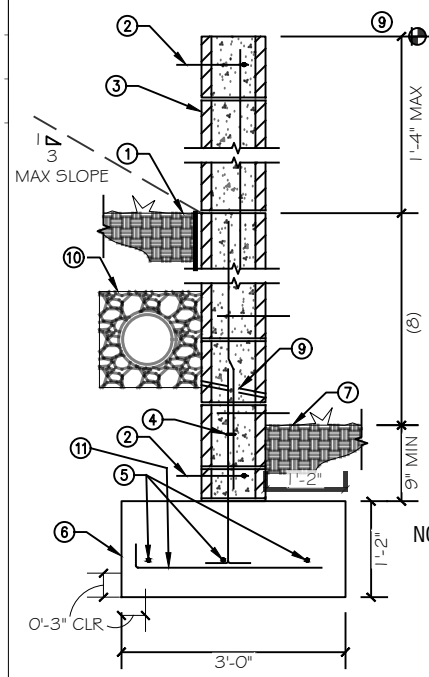

KEYNOTES:

1. FINISHED GRADE
2. 1 #4 CONTINUOUS IN GROUTED BOND BEAM TOP AND BOTTOM OF WALL
3. 8" MASONRY WALL WITH #5 VERTICALS AT 32" O.C. CENTERED IN WALL - GROUT SOLID.
4. DOWELS TO MATCH AND LAP VERTICAL WALL REINFORCING PER G.S.N. - ALTERNATE BENDS
5. 3#5 CONTINUOUS.
6. CONCRETE FOOTING
7. FINISHED GRADE OR CONCRETE SLAB WHERE OCCURS
8. 4'-0" MAXIMUM - FOR TOP OF WALL, SEE ARCHITECTURAL DRAWINGS
9. $\frac{3}{4}$" DIA. WEEP HOLES AT 6'-0" O.C.
10. 1'-0" SQUARE GRAVEL ROCK POCKET WITH 40% VOIDS. BOTTOM OF POCKET SHALL BE 8" ABOVE LOWER FINISHED GRADE
11. #5 @ 12" O.C. HOOK END

NOTES:

A. STEP FOOTING PER TYPICAL DETAIL AS REQUIRED
B. PROVIDE MASONRY CONTROL JOINTS PER TYPICAL DETAIL AT 20'-0" O.C.
C. SEE ARCH. AND/OR CIVIL DRAWINGS FOR LOCATION OF WALLS

215 4' MASONRY RETAINING WALL

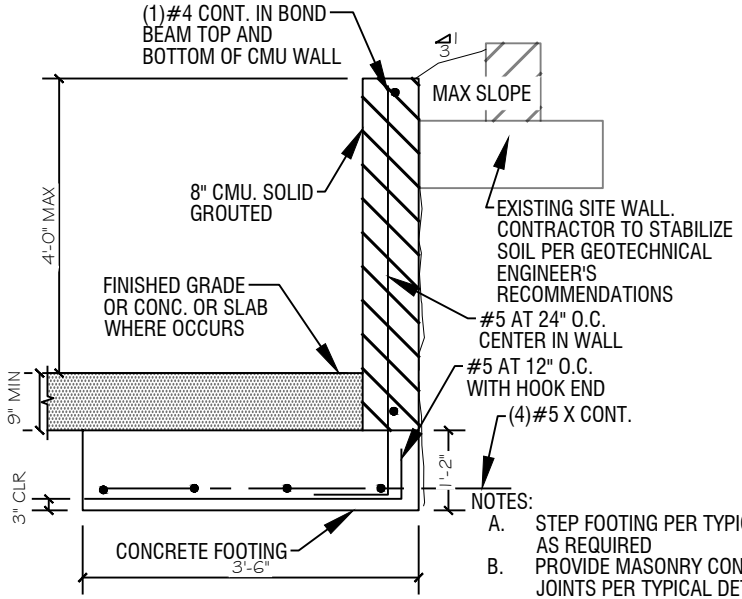

NOTES:

A. STEP FOOTING PER TYPICAL DETAIL AS REQUIRED
B. PROVIDE MASONRY CONTROL JOINTS PER TYPICAL DETAIL AT 20'-0" O.C.
C. SEE ARCH. AND/OR CIVIL DRAWINGS FOR LOCATION OF WALLS

216 RETAINING WALL ADJACENT TO EXISTING SITE WALL

CITY OF PHOENIX
Planning and Development Department

BY: Alfredo Tadaya

05/17/2023

This set of plans has been reviewed for **Structural** requirements prior to issuance of Building Permit and shall be kept at the construction site. Such review shall not prevent the Building Official from requiring correction of errors in the plans where such errors are subsequently found to be in violation of any law or ordinance.

RETAINING WALL DETAILS

SCALE: 1/2" = 1'-0"

THIS DRAWING HAS BEEN DRAWN UNDER THE GUIDANCE OF MSD PLLC AND HAS BEEN REVIEWED FOR COMPLIANCE WITH THE STRUCTURAL CALCULATIONS AND CORRECTNESS ONLY. THE SCOPE OF MSD PLLC DOES NOT EXCEED THAT OF THE ACCOMPANYING CALCULATIONS.

Registered Professional Engineer (Structural)
CERTIFICATE NO. 52235
SCOTT E. SEEMAN
DATE SIGNED 12/9/22
ARIZONA, U.S.A.

PROJECT: DANCO RESIDENCE
4441 N JOKAKE DR
SCOTTSDALE AZ 85251

DATE: 06/14/22

SHEET: SK1

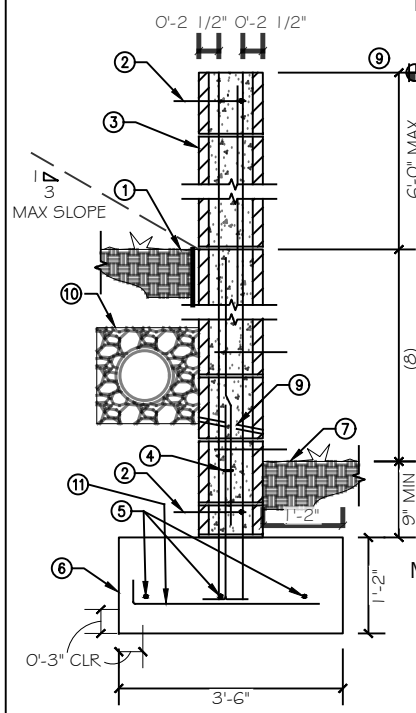

KEYNOTES:

1. FINISHED GRADE
2. 1 #4 CONTINUOUS IN GROUTED BOND BEAM TOP AND BOTTOM OF WALL
3. 8" MASONRY WALL WITH (2)#5 VERTICALS AT 32" O.C. CENTERED IN WALL - GROUT SOLID BELOW RETAINED CONDITION
4. DOWELS TO MATCH AND LAP VERTICAL WALL REINFORCING PER G.S.N. - ALTERNATE BENDS
5. 3#5 CONTINUOUS.
6. CONCRETE FOOTING
7. FINISHED GRADE OR CONCRETE SLAB WHERE OCCURS
8. 4'-0" MAXIMUM - FOR TOP OF WALL, SEE ARCHITECTURAL DRAWINGS
9. 3/4" DIA. WEEP HOLES AT 6'-0" O.C.
10. 1'-0" SQUARE GRAVEL ROCK POCKET WITH 40% VOIDS. BOTTOM OF POCKET SHALL BE 8" ABOVE LOWER FINISHED GRADE
11. #5 @ 12" O.C. HOOK END

NOTES:

A. STEP FOOTING PER TYPICAL DETAIL AS REQUIRED
B. PROVIDE MASONRY CONTROL JOINTS PER TYPICAL DETAIL AT 20'-0" O.C.
C. SEE ARCH. AND/OR CIVIL DRAWINGS FOR LOCATION OF WALLS

217 4' MASONRY RETAINING WALL

CITY OF PHOENIX
Planning and Development Department

BY: Alfredo Tadaya

05/17/2023

This set of plans has been reviewed for **Structural** requirements prior to issuance of Building Permit and shall be kept at the construction site. Such review shall not prevent the Building Official from requiring correction of errors in the plans where such errors are subsequently found to be in violation of any law or ordinance.

RETAINING WALL DETAILS

SCALE: 1/2" = 1'-0"

THIS DRAWING HAS BEEN DRAWN UNDER THE GUIDANCE OF MSD PLLC AND HAS BEEN REVIEWED FOR COMPLIANCE WITH THE STRUCTURAL CALCULATIONS AND CORRECTNESS ONLY. THE SCOPE OF MSD PLLC DOES NOT EXCEED THAT OF THE ACCOMPANYING CALCULATIONS.

Registered Professional Engineer (Structural)
CERTIFICATE NO. 52235
SCOTT E. SEEMAN
DATE SIGNED 12/9/22
ARIZONA, U.S.A.

PROJECT: DANCO RESIDENCE
4441 N JOKAKE DR
SCOTTSDALE AZ 85251

DATE: 06/14/22

SHEET: SK2

SINGLE LOT GRADING AND DRAINAGE PLAN (WITH OFFSITE FLOWS) FOR DANCO RESIDENCE

4441 N JOKAKE DR SCOTTSDALE, AZ 85251 (PHOENIX CITY LIMIT)

ENGINEERING NOTES:

1. THESE PLANS ARE SUBJECT TO THE INTERPRETATION OF INTENT BY THE ENGINEER. QUESTIONS REGARDING THESE PLANS SHALL BE PRESENTED TO THE ENGINEER. ANYONE WHO TAKES IT UPON THEMSELF THE INTERPRETATION OF THE DRAWINGS OR MAKES REVISIONS TO THE SAME WITHOUT CONFERRING WITH THE DESIGN ENGINEER SHALL BE RESPONSIBLE FOR THE CONSEQUENCES THEREOF.
2. THE ESTIMATED QUANTITIES SHOWN ARE FOR INFORMATIONAL PURPOSES ONLY. THE CONTRACTOR SHALL SATISFY THEMSELVES AS TO ACTUAL QUANTITIES BASED ON PERMITTED PLANS, CURRENT CODES, AND ACTUAL SITE CONDITIONS.
3. ALL EARTHWORK CONSTRUCTION SHALL CONFORM TO THE LATEST MARICOPA ASSOCIATION OF GOVERNMENTS STANDARD DETAILS AND SPECIFICATIONS INCLUDING ANY SUPPLEMENTS THERETO, AND ALL ADDENDA. THE CONTRACTOR IS TO FOLLOW THE RECOMMENDATION OF THE PROJECT SOIL INVESTIGATION AND REPORT AS PROVIDED BY THE OWNER.
4. THE CONTRACTOR SHALL BE RESPONSIBLE FOR CONSTRUCTION MEANS, METHODS, TECHNIQUES, SEQUENCES, PROCEDURES OR SAFETY PRECAUTIONS OR PROGRAMS UTILIZED IN CONNECTION WITH THE WORK,
5. THE SURVEYOR WILL MAKE FIELD AS-BUILT MEASUREMENTS OF THE WORK UPON NOTIFICATION BY THE CLIENT OR HIS REPRESENTATIVE THAT THE WORK IS COMPLETE AND READY FOR AS-BUILT SURVEY. FOR PIPE WORK, THE CONTRACTOR IS RESPONSIBLE FOR COORDINATING CONSTRUCTION EVENTS SO THAT AS-BUILTS CAN BE PERFORMED TO COMPLY WITH THE JURISDICTIONAL REQUIREMENTS.
6. THE CONTRACTOR IS TO VERIFY THE LOCATION, ELEVATION, CONDITION, AND PAVEMENT CROSS-SLOPE OF ALL EXISTING SURFACES AT POINTS OF TIE-IN AND MATCHING, PRIOR TO COMMENCEMENT OF GRADING, PAVING, CURB AND GUTTER OR OTHER SURFACE CONSTRUCTION. SHOULD EXISTING LOCATIONS, ELEVATIONS, CONDITION, OR PAVEMENT CROSS-SLOPE DIFFER FROM THAT SHOWN ON THESE PLANS, RESULTING IN THE DESIGN INTENT REFLECTED ON THE PLANS NOT ABLE TO BE CONSTRUCTED, THE CONTRACTOR SHALL NOTIFY THE OWNER'S AGENT IMMEDIATELY FOR DIRECTION ON HOW TO PROCEED PRIOR TO COMMENCEMENT OF CONSTRUCTION. THE CONTRACTOR ACCEPTS RESPONSIBILITY FOR ALL COSTS ASSOCIATED WITH CORRECTIVE ACTION IF THESE PROCEDURES ARE NOT FOLLOWED.
7. EXISTING UTILITIES SHOWN ON THESE PLANS HAVE BEEN LOCATED ACCORDING TO INFORMATION PROVIDED BY THE AGENCY OPERATING EACH UTILITY. LOCATIONS SHOWN ARE APPROXIMATE ONLY. THE CONTRACTOR SHALL PROTECT AND MAINTAIN ALL EXISTING UTILITIES ON THE SITE. ANY DAMAGE TO EXISTING UTILITIES, WHETHER SHOWN OR NOT ON THE DRAWING, SHALL BE REPAIRED/REPLACED AT THE CONTRACTOR'S EXPENSE. CALL BLUE STAKE FOR FIELD LOCATION AT (602) 263-1100.
8. THE ENGINEER AND APPLICABLE AGENCY MUST APPROVE, PRIOR TO CONSTRUCTION, ANY ALTERATION, OR VARIANCE FROM THESE PLANS. ANY VARIATIONS FROM THESE PLANS SHALL BE PROPOSED ON CONSTRUCTION FIELD PRINTS AND TRANSMITTED TO THE ENGINEER.
9. ANY INSPECTION BY THE CITY, COUNTY, ENGINEER, OR OTHER JURISDICTIONAL AGENCY, SHALL NOT, IN ANY WAY, RELIEVE THE CONTRACTOR FROM ANY OBLIGATION TO PERFORM THE WORK IN STRICT COMPLIANCE WITH APPLICABLE CODES AND AGENCY REQUIREMENTS.
10. CONTRACTOR IS RESPONSIBLE FOR PROTECTING ALL STORM DRAIN PIPES, STORM WATER RETENTION PIPES AND DRAINAGE FACILITIES FROM DAMAGE DURING ALL STAGES OF CONSTRUCTION.
11. CONTRACTOR TO VERIFY AND COORDINATE ALL DIMENSIONS AND SITE LAYOUT WITH ARCHITECT'S FINAL SITE PLAN AND FINAL BUILDING DIMENSIONS BEFORE STARTING WORK. REPORT DISCREPANCIES TO OWNER'S AGENT.
12. THE CONTRACTOR SHALL "AS-BUILT" HORIZONTAL AND VERTICAL LOCATIONS AND DEPTH OF UNDERGROUND WATER, SEWER AND RECLAIMED WATER MAINLINES BEFORE BACKFILLING. AND ENSURE THAT ALL OBSERVATIONS, DOCUMENTATION AND TESTING REQUIRED FOR "ENGINEER OF RECORD" AND HEALTH DEPARTMENT REVIEWS IS COMPLETED AT THE CONTRACTOR'S SOLE EXPENSE. RESULTS AND DOCUMENTATION IS TO BE PROVIDED TO THE OWNER/DEVELOPER AND "ENGINEER OF RECORD" IN A TIMELY MANOR.
13. UNLESS OTHERWISE NOTED, THE CONTRACTOR SHALL PROVIDE FOR AND COORDINATE ALL QUALITY TESTING FOR THE PROJECT AS REQUIRED BY ALL PERMITTING AGENCIES.
14. CONTRACTOR SHALL CONSTRUCT PER REQUIRED A.D.A. MAXIMUM SLOPES AT BUILDING ENTRANCES, A.D.A. PARKING STALLS, A.D.A. RAMPS, AND A.D.A. ROUTES. NOTIFY ENGINEER OF ANY DISCREPANCIES.
15. THE TOPOGRAPHIC AND/OR BOUNDARY SURVEY FOR THIS PROJECT WAS PROVIDED BY: ABEL & ASSOCIATES, LLC, IN LAVEEN, ARIZONA; (602)501-6957. THE SURVEY WAS PREPARED ON NOV 2021. REYES DC LLC IS NOT RESPONSIBLE FOR ITS CONTENT OR ACCURACY.

CITY OF PHOENIX GRADING AND DRAINAGE NOTES

1. A GRADING PERMIT IS REQUIRED UNDER CHAPTER 32A OF THE PHOENIX CITY CODE.
2. WHEN HAUL PERMITS ARE REQUIRED, THEY MUST BE OBTAINED PRIOR TO OR CONCURRENTLY WITH THE GRADING AND DRAINAGE PERMIT.
3. EXCAVATING CONTRACTOR MUST GIVE LOCATION FOR WASTING EXCESS EXCAVATION AND A LETTER FROM OWNER GIVING PERMISSION FOR DUMPING PRIOR TO STARTING ON-SITE CONSTRUCTION. IF EXCESS EXCAVATION EXCEEDS 100 CUBIC YARDS, THE DISPOSAL SITE WILL ALSO REQUIRE A GRADING AND DRAINAGE PERMIT.
4. PLANNING & DEVELOPMENT DEPARTMENT FIELD INSPECTION GROUP SHALL BE NOTIFIED 48 HOURS BEFORE ANY ONSITE AND/OR OFF-SITE CONSTRUCTION BEGINS, TELEPHONE (602) 262-7811.
5. STAKING FINISH FLOOR ELEVATIONS IS THE RESPONSIBILITY OF THE OWNER AND HIS ENGINEER. THE OWNER'S ENGINEER SHALL SUBMIT THREE SEALED COPIES OF THIS GRADING AND DRAINAGE PLAN DESIGNATED AS "RECORD DRAWING" (BEARING AN ORIGINAL SIGNATURE) PRIOR TO THE REQUEST FOR FINAL INSPECTION.
6. A FEDERAL EMERGENCY MANAGEMENT AGENCY (FEMA) "ELEVATION CERTIFICATE" MUST BE COMPLETED FOR EACH STRUCTURE CONSTRUCTED IN A SPECIAL FLOOD HAZARD AREA (SFHA) PRIOR TO AN ELECTRICAL CLEARANCE FOR THE STRUCTURE. ONCE COPY OF THE "ELEVATION CERTIFICATE" IS TO BE SUBMITTED TO THE GENERAL BUILDING SAFETY INSPECTOR ON SITE AND ONE COPY IS TO BE SUBMITTED TOT HE CITY OF PHOENIX FLOOD PLAIN MANAGER. b. IN ADDITION, SPECIFY THE NAME, ADDRESS, AND TELEPHONE NUMBER OF THE ARIZONA REGISTERED ENGINEER OR LAND SURVEYOR RESPONSIBLE FOR THE PROVIDING CERTIFICATION.
7. A SEPARATE PERMIT IS NECESSARY FOR ANY OFFSITE CONSTRUCTION.
8. AN APPROVED GRADING AND DRAINAGE PLAN SHALL BE ON THE JOB SITE AT ALL TIMES. DEVIATIONS FROM THE PLAN MUST BE PRECEDED BY AN APPROVED PLAN REVISION.
9. GRADING AND DRAINAGE PLAN APPROVAL INCLUDES THE CONSTRUCTION OF ALL SURFACE IMPROVEMENTS SHOWN ON THE APPROVED PLAN, INCLUDING, BUT NOT LIMITED TO, RETENTION AREAS, SEDIMENTATION BASINS, AND/OR OTHER DRAINAGE FACILITIES, DRAINAGE PATTERNS, WALLS, CURBS, ASPHALT PAVEMENT, AND BUILDING FLOOR ELEVATION.
10. GRADES SHOWN IN RETENTION BASINS ARE DESIGN FINISHED GRADES. SHOULD THE CONTRACTOR OR ANY SUBCONTRACTOR PLAN TO PLACE SPOIL DIRT FROM FOOTINGS, UTILITY TRENCHES, LANDSCAPING, SWIMMING POOLS, ETC. IN THE BASINS, THE BASINS SHOULD BE SUFFICIENTLY OVER-EXCAVATED DURING THE ROUGH GRADING OPERATION TO ALLOW FOR THE PLACEMENT OF THE FILL OR LANDSCAPING MATERIALS.
11. CONTRACTOR IS RESPONSIBLE FOR LOCATING AND CONFIRMING DEPTHS OF ALL THE EXISTING UTILITY LINES WITHIN PROPOSED RETENTION BASIN AREAS. IF THE BASIN CANNOT BE CONSTRUCTED PER PLAN BECAUSE OF CONFLICTS, THE CONTRACTOR SHOULD DISCUSS MODIFICATION OF BASIN CONFIGURATION WITH THE CITY INSPECTOR TO DETERMINE IF A PLAN REVISION OR A FIELD CHANGE IS REQUIRED.
12. ALL DRAINAGE PROTECTIVE DEVICES SUCH AS SWALES, INTERCEPTOR DITCHES, PIPES, PROTECTIVE BERMS, BARRIER WALLS, CONCRETE CHANNELS, OR OTHER MEASURES DESIGNED TO PROTECT ADJACENT BUILDINGS OR PROPERTY FROM STORM RUNOFF MUST BE COMPLETED PRIOR TO BUILDING CONSTRUCTION.
13. PER SECTION 6.8.7 OF THE STORM WATER POLICIES AND STANDARDS, SIDE SLOPES OF STORM WATER STORAGE FACILITIES SHALL BE NO STEEPER THAN 5:1 FOR IRRIGATED GRASS AREAS AND 3:1 FOR LANDSCAPE AREAS. SLOPE STABILIZATION MEASURES ARE REQUIRED FOR ALL SLOPES GREATER THAN 5:1. THE SLOPE STABILIZATION MEASURES MUST BE READILY MAINTAINABLE USING COMMON MAINTENANCE EQUIPMENT AND BE DESIGNED WITH CONSIDERATION TO AESTHETICS. THE SLOPE STABILIZATION MEASURES SHALL BE CONSISTENT WITH COMMONLY USED ENGINEERING PRACTICES. UN-STABILIZED DECOMPOSED GRANITE IS NOT ALLOWED ON SLOPES GREATER THAN 5:1.
14. ALL RETAINING WALLS ARE TO BE REVIEWED, PERMITTED, AND INSPECTED BY THE RESIDENTIAL PLAN REVIEW AND INSPECTION BRANCH OF THE PLANNING & DEVELOPMENT DEPARTMENT. ALL RETAINING WALL ARE TO BE IN ACCORDANCE WITH SECTION 703 OF THE ZONING ORDINANCE AND SECTION 32-32 OF THE SUBDIVISION ORDINANCE FOR SPECIFIC WALL HEIGHT REQUIREMENTS. USE PERMIT FOR IS REQUIRED FOR ALL OVER-HEIGHT RETAINING WALLS.
15. ALL RAMPS MUST MEET 2010 ADA STANDARDS FOR ACCESSIBLE DESIGN AND CITY OF PHOENIX SUPPLEMENT TO M.A.G. UNIFORM STANDARD SPECIFICATIONS AND DETAILS; 2% MAX CROSS SLOPES AND 12:1 MAX LONGITUDINAL SLOPES.
16. CERTIFICATE OF OCCUPANCY (C OF O) AND/OR FINAL ELECTRICAL CLEARANCE FOR ANY BUILDING IS DENIED UNTIL ALL GRADING AND DRAINAGE IMPROVEMENTS ARE COMPLETED.
17. EXISTING OR NEWLY DAMAGED AND/OR DISPLACED CONCRETE CURB, GUTTER, SIDEWALK, OR DRIVEWAY SLAB THAT IS WITHIN THE RIGHT-OF-WAY SHALL BE REPAIRED OR REPLACED, AS NOTED BY CITY INSPECTORS, BEFORE FINAL ACCEPTANCE OF THE WORK.
18. THE ENGINEERING DESIGN ON THESE PLANS IS ONLY APPROVED BY THE CITY IN SCOPE AND NOT IN DETAIL. CONSTRUCTION QUANTITIES ON THESE PLANS ARE NOT VERIFIED BY THE CITY. APPROVAL OF THESE PLANS ARE FOR PERMIT PURPOSES ONLY AND SHALL NOT PREVENT THE CITY FROM REQUIRING CORRECTION OF ERRORS IN THE PLANS WHERE SUCH ERRORS ARE SUBSEQUENTLY FOUND TO BE IN VIOLATION OF ANY LAW, ORDINANCE, HEALTH, SAFETY, OR OTHER DESIGN ISSUES.
19. THE CITY OF PHOENIX POLICE DEPARTMENT ENFORCES LAWS REGULATING THE OPERATION OF COMMERCIAL VEHICLES. THIS INCLUDES ENFORCEMENT OF FEDERAL, STATE, COUNTY AND LOCAL LAWS AND ORDINANCES. QUESTIONS REGARDING COMMERCIAL VEHICLE ENFORCEMENT MAY BE DIRECTED TO THE COMMERCIAL VEHICLE ENFORCEMENT SUPERVISOR AT (602) 495-7813 (TRAFFIC BUREAU SOUTH) OR (602) 495-6784 (TRAFFIC BUREAU NORTH).
20. PLAN APPROVAL IS VALID FOR 12 MONTHS. PRIOR TO PLAN APPROVAL EXPIRATION, ALL ASSOCIATED PERMITS SHALL BE PURCHASED OR THE PLANS SHALL BE RESUBMITTED FOR EXTENSION OF PLAN APPROVAL. THE EXPIRATION, EXTENSION, AND REINSTATEMENT OF CIVIL ENGINEERING PLANS AND PERMITS SHALL FOLLOW THE SAME GUIDELINES AS THOSE INDICATED IN THE PHOENIX BUILDING CONSTRUCTION CODE ADMINISTRATIVE PROVISIONS SECTION 105.3 FOR BUILDING PERMITS.

SITE INFORMATION

SUBDIVISION:	JOKAKE ESTATES
LOT #:	9
APN #:	172-29-017
ADDRESS: AZ 85251	4441 N JOKAKE DR SCOTTSDALE,
COUNTY:	MARICOPA
JURISDICTION:	PHOENIX
ZONING:	RE-35
YEAR BUILT:	1977
LOT AREA:	34,500 SQ.FT. = 0.8185 AC
WATER SERVICE:	CITY OF PHOENIX WATER
SEWER SERVICE:	CITY OF PHOENIX SEWER

BUILDING AREA

PROPOSED

LIVING SPACE	6,417 SQ.FT.
PATIO	659 SQ.FT.
PORCH	189 SQ.FT.
GARAGE	896 SQ.FT.
TOTAL AREA	8,788 SQ.FT.
TOTAL LOT AREA(SURVEY)	34,500 SQ.FT.
% OF LOT COVERAGE	25.5%
LOT COVERAGE ALLOWED	30%

DISTURBED AREA

TOTAL DISTURBED AREA: 34,500 SQ.FT. = 0.8185 AC

LEGAL DESCRIPTION

PER DOCUMENT NUMBER 2020-0827211:

LOT NONE (9), JOKAKE ESTATES, ACCORDING TO BOOK 167 OF MAPS, PAGE 48, RECORDS OF MARICOPA COUNTY, ARIZONA.

BENCHMARKS

PER THE MARICOPA COUNTY GEODETIC DENSIFICATION AND CADASTRAL SURVEY WEB PAGE, THE BENCHMARK FOR THIS SURVEY IS A BRASS CAP IN HANDHOLE AT THE NORTHEAST CORNER OF SECTION 21, T2N, R4E. ELEVATION=1303.264' (NAVD29 DATUM)

BASIS OF BEARING

BASIS OF BEARING IS DUE SOUTH 0°10'00" WEST (ASSUMED) ALONG THE CENTERLINE OF NORTH JOKAKE DRIVE, AS RECORDED IN BOOK 167 OF MAPS, PAGE 48.

PROJECT DESCRIPTION

GRADING AND DRAINAGE PLAN FOR A NEW HOUSE, RETENTION BASINS AND RETAINING WALLS.

DRAINAGE STATEMENT

1. THE SITE IS NOT IN A SPECIAL FLOOD HAZARD AREA.
2. YES, OFFSITE FLOWS DO AFFECT THIS SITE.
3. RETENTION PROVIDED IS FOR THE 100YR-2HR (2.17")
4. EXTREME STORM OUTFALL FOR THE SITE IS AT THE ELEVATION 1318.40.

Residential and Civil Inspectors: Permit and Plan

**** The plans associated with this permit were reviewed under Electronic Plan Review (EPR). The applicant is required to provide a full size 24" x 36" copy of the approved plans to the residential and civil inspectors prior to the start of construction. ****

DRYWELL NOTES

1. THE OWNER/DEVELOPER SHALL BE RESPONSIBLE FOR REGISTERING THE DRY WELLS SHOWN ON THE GRADING AND DRAINAGE PLAN WITH THE ARIZONA DEPARTMENT OF ENVIRONMENTAL QUALITY (A.D.E.Q.) FOR INFORMATION ABOUT SPECIFIC REQUIREMENTS, CONTACT THE WATER PERMITS UNIT AT (602)771-4686.
2. DRY WELLS MUST BE DRILLED A MINIMUM OF 10 FEET INTO PERMEABLE POROUS STRATA OR PERCOLATION TESTS WILL BE REQUIRED. THE GRADING AND DRAINAGE INSPECTOR MUST BE PRESENT BEFORE BACKFILLING OR WELL PIPES ARE PLACED WITHIN ANY DRY WELLS.
3. THE OWNER/DEVELOPER IS RESPONSIBLE FOR INSTALLING DRYWELL(S) SHOULD THE RETENTION BASINS FAIL TO DRAIN WITHIN 36 HOURS.

DRAINAGE REPORT:

FLOODPLAIN

THIS SITE LIES ENTIRELY WITHIN ZONE X, AS SHOWN ON FEMA FLOOD INSURANCE RATE MAP – PANEL 04013C1765L, REVISED ON OCTOBER 16, 2013. THE ENTIRE HOUSE IS POSITIONED IN ZONE X – OUTSIDE THE FLOOD PLAIN. ZONE X DENOTES AREAS OF 0.2% ANNUAL CHANCE OF FLOOD; AREAS OF 1% ANNUAL CHANCE OF FLOOD WITH AVERAGE DEPTHS OF LESS THAN 1 FOOT OR WITH DRAINAGE AREAS LESS THAN 1 SQUARE MILE; AREAS PROTECTED BY LEVEES FROM 1% ANNUAL FLOOD CHANCE.

ONSITE RETENTION

STORMWATER VOLUME WAS PROVIDED FOR THE 100YR-2HR (2.17").

VOLUME REQUIRED = 3,431 CF
VOLUME PROVIDED = 3,753 CF

V/R=C*(P/12)*A , C=RUNOFF COEFFICIENT= .55

V/R = 3,431 CF P= PRECIPITATION (100YR-2HR) = 2.17", A= AREA =34,500 SF

V/P = 3,753 CF (BASIN A1+BASIN A2+BASIN B=630+551+2,572=3,753)

OWNER/BUILDER

DANCO HOMES LLC
4441 N JOKAKE DR
SCOTTSDALE, AZ 85251
(707)822-9000

ENGINEER

REYES DC, LLC
4730 W. HUBBELL ST.
PHOENIX, ARIZONA 85035
602-309-4247
REYESDCLLC@GMAIL.COM

SURVEYOR

ABEL & ASSOCIATES, LLC
PO BOX 226
LAVEEN, ARIZONA 85339
(602)501-6957

ABBREVIATIONS LEGEND

APN	ASSESSOR PARCEL NUMBER
BOT	BOTTOM
FG	FINISH GRADE
EG	EXISTING GRADE
C	CONCRETE
CFS	CUBIC FEET PER SECOND
LF	LINEAR FEET
LG	LOW GRADE
PL	PROPERTY LINE
SF	SQUARE FEET
Q-100	100-YR PEAK FLOW
HG	HIGH GRADE
HWE	HIGH WATER ELEVATION
RC	REINFORCED CONCRETE
RW	RETAINING WALL
TOF	TOP OF FOOTING
TW	TOP OF RETAINING WALL
TVF	TOP OF VIEW FENCE

DRYWELL NOTES

NEW DRY WELL INSTALLATION CHECKLIST DRYWELLS ARE NOT REQUIRED TO BE SHOWN ON THE PLAN SET FOR RETENTION BASINS WITH GEOMETRIC DEPTHS OF LESS THAN ONE FOOT (BASIN OUTFALL ELEVATION-BOTTOM ELEVATION). THE FOLLOWING NOTES ARE REQUIRED ON GRADING & DRAINAGE (GRADING AND DRAINAGE) PLANS WHEN A DRY WELL IS TO BE INSTALLED: A. THE OWNER/DEVELOPER SHALL BE RESPONSIBLE FOR REGISTERING THE DRY WELLS SHOWN ON THE GRADING AND DRAINAGE PLAN WITH THE ARIZONA DEPARTMENT OF ENVIRONMENTAL QUALITY (A.D.E.Q.). FOR INFORMATION ABOUT SPECIFIC REQUIREMENTS, CONTACT THE WATER PERMITS UNIT AT (602) 771-4686. B. DRY WELLS MUST BE DRILLED A MINIMUM OF 10 FEET INTO PERMEABLE POROUS STRATA OR PERCOLATION TESTS WILL BE REQUIRED. THE GRADING AND DRAINAGE INSPECTOR MUST BE PRESENT BEFORE BACKFILLING OR WELL PIPES ARE PLACED WITHIN ANY DRY WELLS. C. THE OWNER/DEVELOPER IS RESPONSIBLE FOR INSTALLING DRYWELL(S) SHOULD THE RETENTION BASINS FAIL TO DRAIN WITHIN 36 HOURS. DRY WELL DETAIL AND SPECIFICATIONS NEED TO BE SHOWN ON GRADING AND DRAINAGE PLANS. GRATE ELEVATION FOR THE DRY WELL NEEDS TO BE SHOWN ON GRADING AND DRAINAGE PLAN AT MINIMUM OF 0.3 FEET ABOVE BOTTOM OF RETENTION BASIN (ALLOWS FOR SILTING). FOR BLEED-OFF TO CITY STORM DRAIN SYSTEM THE GRATE NEEDS TO BE 0.75 FEET ABOVE BOTTOM OF BASIN.

WALL LENGTHS

4FT MAX RETAINING WALL	1,060 LF
4FT MAX WITH 6FT MAX CMU VIEW FENCE	165 LF
3FT CMU WALL/VIEW FENCE	112 LF

EARTHWORK (CUT/FILL):

CUT = 200 CY
FILL = 1,895 CY
NET(FILL) = 1,695 CY

INDEX SHEET

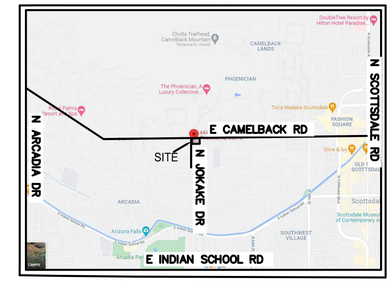

N

VICINITY MAP
NTS

LEGEND

	ADJACENT BOUNDARY LINE
	PROPERTY LINE
	BUILDING SETBACK LINE
	EASEMENT
1233	FINISHED GROUND CONTOUR (1' INTERVAL)
1233	EXISTING GROUND CONTOUR (1' INTERVAL)
	LIMIT OF GRADING
	DRAINAGE FLOW ARROW
	RETAINING WALL
	CMU WALL
	HIGH WATER SURFACE ELEVATION
6"W	EXISTING WATER SERVICE LINE
8"S	EXISTING SEWER SERVICE LINE
OHE	PROPOSED ELECTRIC LINE
1/2"G	PROPOSED GAS LINE
WS	WATER SERVICE LINE
	NEW BUILDING
	EXISTING ASPHALT
	CONCRETE DRIVEWAY

AS-BUILT CERTIFICATION

I HEREBY CERTIFY THAT THE "RECORD DRAWING" MEASUREMENTS AS SHOWN HEREON WERE MADE UNDER MY SUPERVISION OR AS NOTED AND ARE CORRECT TO THE BEST OF MY KNOWLEDGE AND BELIEF.

_____ _____ _____
REGISTERED ENGINEER/ LAND SURVEYOR DATE

_____
REGISTRATION NUMBER

APPROVALS

KIVA#	95-0002753
CPGD#	2206269
SPAD#	2206779
QS#	17-42

REVISIONS:

REYES DC, LLC
4730 W. HUBBELL ST. PHX AZ, 85035
(602)309-4247
REYESDCLLC@GMAIL.COM

SINGLE LOT GRADING AND DRAINAGE PLAN (WITH OFFSITE FLOWS)

PROJECT: DANCO RESIDENCE
4441 N JOKAKE DR SCOTTSDALE, AZ 85251

811 Know what's below. Call before you dig.

Registered Professional Engineer (Civil) CERTIFICATE NO. 52934 JUAN J. REYES Date Signed 02/06/23 ARIZONA U.S.A. EXPIRES 12/31/23

COVER SHEET

JOB NO. 21701

DRAWN BY: JJR

SHEET NO. 1 OF 3 C1

City of Phoenix Plan #: 2206269-CPGD Date: 02/07/23

City of Phoenix Plan #: 2206269-CPGD Date: 02/07/23

C:\Users\jrg91\Dropbox\21701-Danco-Phx-GD\Work\GD-Plan-Danco.dwg jrg91 2023-01-19 12:43:18

KIVA# 95-0002753
CPGD# 2206269
SPAD# 2206779
QS# 17-42

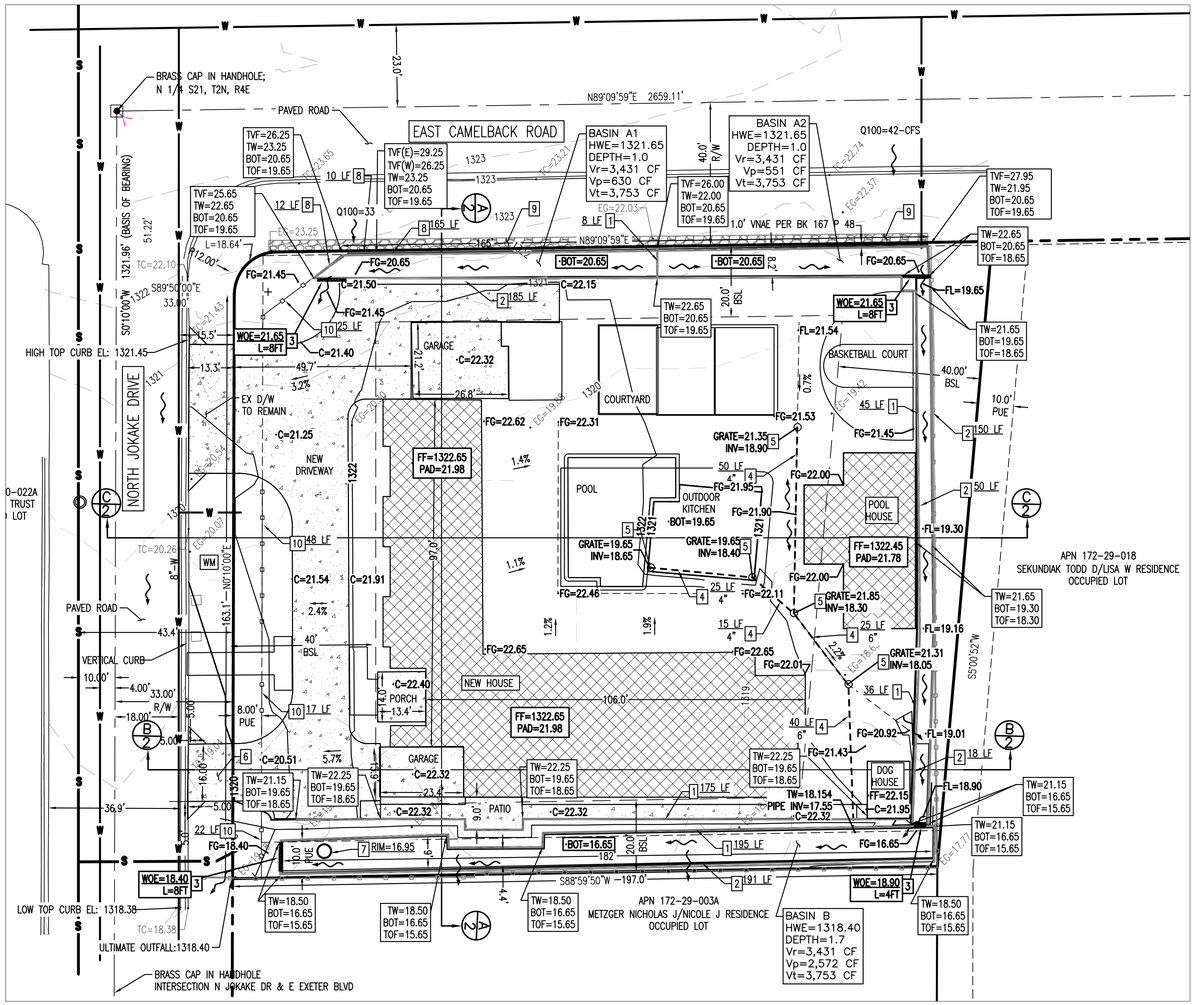

CONSTRUCTION NOTES

1. 4FT MAX RETAINING WALL, SEE STRUCTURAL DETAIL 215, SHEET 3
2. 4FT MAX RETAINING WALL(TYPICALLY NEAR POOL HOUSE, DOG HOUSE AND EXISTING CMU WALL, SEE STRUCTURAL DETAIL 216, SHEET 3
3. PROVIDE RC WEIR OVERFLOW OPENING, PER DETAIL 1, SHEET 3
4. INSTALL PVC STORM DRAIN PIPE. SIZE AND INVERT PER PLAN
5. INSTALL 12" ADS NYLOPLAST DRAIN BASIN
6. NEW DRIVEWAY PER COP STD DTL P1255-1
7. INSTALL SINGLE CHAMBER DRYWELL MAXWELL IV OR APPROVED EQUAL PER DRYWELL DETAIL ON SHEET 3
8. INSTALL 6FT MAX CMU WALL WITH TURN BLOCK DRAINAGE OPENINGS (EVERY OTHER BLOCK) ON 4FT MAX RETAINING WALL, SEE STRUCTURAL DETAIL 217, SHEET 3
9. EXISTING RIPRAP TO REMAIN ALONG ENTIRE PERIMETER OF NORTH FENCE. ANY SEGMENT WITHOUT RIPRAP SHALL HAVE RIPRAP (D50=6", 12" THICK, 3FT WIDE) INSTALLED SO ENTIRE NORTH PROPERTY BOUNDARY HAS RIPRAP
10. INSTALL 3FT CMU WALL WITH DRAINAGE OPENINGS PER DETAIL 2, SHEET 3

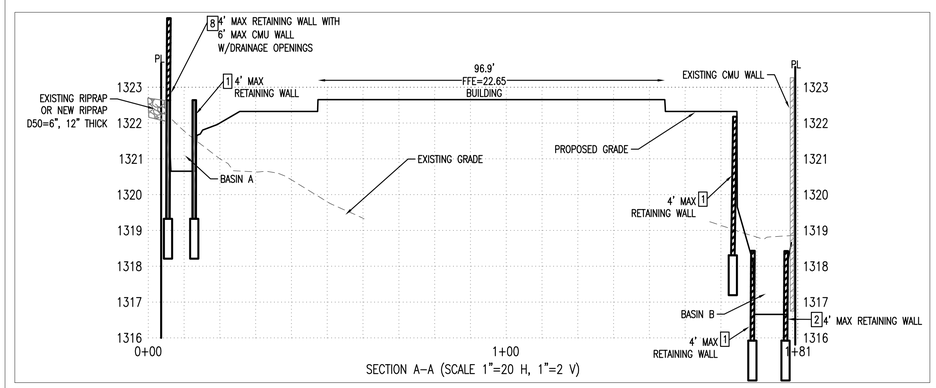

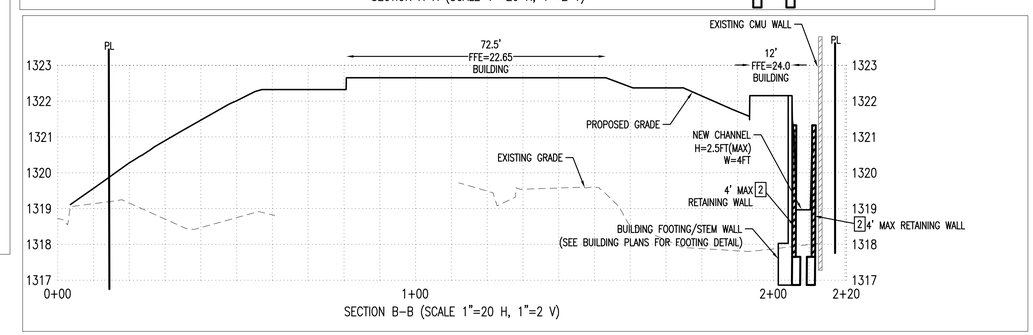

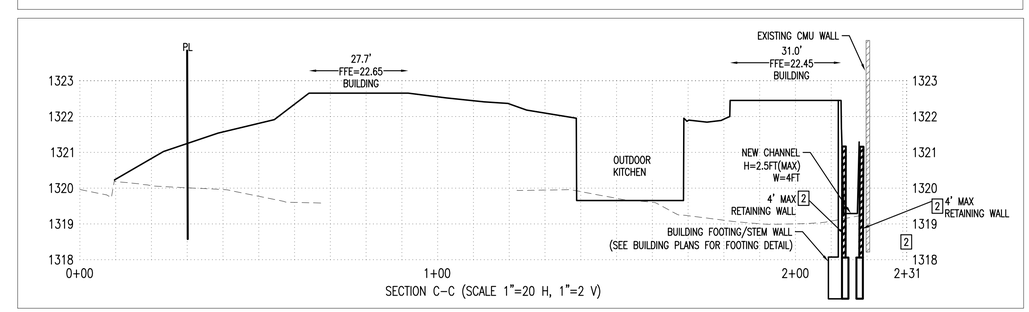

REVISIONS:

REYES DC, LLC
4730 W. HUBBELL ST. PHX AZ, 85035
(602)309-4247
REYESDCLLC@GMAIL.COM

SINGLE LOT GRADING AND DRAINAGE PLAN (WITH OFFSITE FLOWS)

PROJECT:
DANCO RESIDENCE
4441 N JOKAKE DR SCOTTSDALE, AZ 85251

Know what's below. Call before you dig.

CERTIFICATE OF PROFESSIONAL PROGRESS
52934
JUAN J. REYES
Registered Professional Engineer (Civil)
ARIZONA U.S.A.
EXPIRES 12/31/23

GD SHEET

JOB NO. 21701
DRAWN BY: JJR

SHEET NO. 2 OF 3
C2

City of Phoenix Plan #: 2206269-CPGD Date: 02/07/23

City of Phoenix Plan #: 2206269-CPGD Date: 02/07/23

C:\Users\jrod91\Dropbox\21701-Danco-Phx-GD\Work\GD-Plan-Danco.dwg jrod91 2023-01-19 12:43:28

City of Phoenix Plan #: 2206269-CPGD Date: 02/07/23

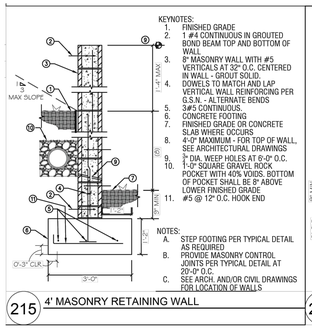

215 4' MASONRY RETAINING WALL

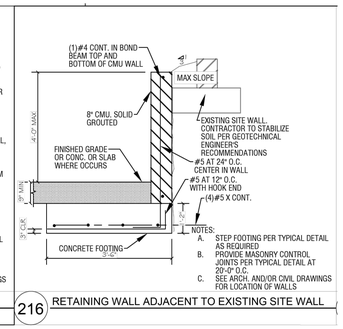

216 RETAINING WALL ADJACENT TO EXISTING SITE WALL

RETAINING WALL DETAILS

SCALE: 1/2" = 1'-0"

THIS DRAWING HAS BEEN DRAWN UNDER THE GUIDANCE OF MSD PLLC AND HAS BEEN REVIEWED FOR COMPLIANCE WITH THE STRUCTURAL CALCULATIONS AND CORRECTNESS ONLY. THE SCOPE OF MSD PLLC DOES NOT EXCEED THAT OF THE ACCOMPANYING CALCULATIONS.

REGISTERED PROFESSIONAL ENGINEER (CIVIL) 52235 SCOTT E. SEEMAN DATE SIGNED 12/20/22 ARIZONA, U.S.A.

SHEET: SK1

DATE: 06/14/22

PROJECT: DANCO RESIDENCE 4441 N JOKAKE DR SCOTTSDALE AZ 85251

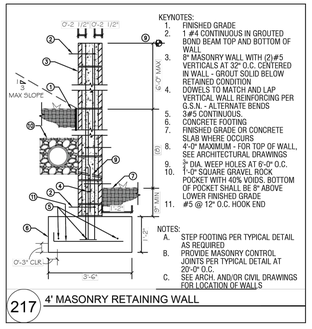

217 4' MASONRY RETAINING WALL

RETAINING WALL DETAILS

SCALE: 1/2" = 1'-0"

THIS DRAWING HAS BEEN DRAWN UNDER THE GUIDANCE OF MSD PLLC AND HAS BEEN REVIEWED FOR COMPLIANCE WITH THE STRUCTURAL CALCULATIONS AND CORRECTNESS ONLY. THE SCOPE OF MSD PLLC DOES NOT EXCEED THAT OF THE ACCOMPANYING CALCULATIONS.

REGISTERED PROFESSIONAL ENGINEER (CIVIL) 52235 SCOTT E. SEEMAN DATE SIGNED 12/20/22 ARIZONA, U.S.A.

SHEET: SK2

DATE: 06/14/22

PROJECT: DANCO RESIDENCE 4441 N JOKAKE DR SCOTTSDALE AZ 85251

4441 N Jokake - Phoenix

The MaxWell® IV Drainage System Detail And Specifications

NOTES

1. **MANHOLE CONE** - MODIFIED FLAT BOTTOM.
2. **MOISTURE MEMBRANE** - 6 MIL. PLASTIC. APPLIES ONLY WHEN NATIVE MATERIAL IS USED FOR BACKFILL. PLACE MEMBRANE SECURELY AGAINST ECCENTRIC CONE AND HOLE SIDEWALL.
3. **BOLTED RING & GRATE** - DIAMETER AS SHOWN. CLEAN CAST IRON WITH WORDING **"STORM WATER ONLY"** IN RAISED LETTERS. **BOLTED IN 2 LOCATIONS** AND SECURED TO CONE WITH MORTAR. RIM ELEVATION ±0.02" OF PLANS.
4. **GRADED BASIN OR PAVING** (BY OTHERS).
5. **STABILIZED BACKFILL** - 1 SACK SLURRY.
6. **PUREFLO® DEBRIS SHIELD** - ROLLED 16 GA. STEEL X 24" LENGTH WITH VENTED ANTI-SIPHON AND INTERNAL .265" MAX. SWO FLATTENED EXPANDED STEEL SCREEN X 12" LENGTH. **FUSION BONDED EPOXY COATED.**
7. **PRE-CAST LINER** - 4000 PSI CONCRETE 48" ID. X 54" OD. **CENTER IN HOLE** AND ALIGN SECTIONS TO **MAXIMIZE BEARING SURFACE**.
8. **MIN. 6' Ø DRILLED SHAFT**.
9. **SUPPORT BRACKET** - FORMED 12 GA. STEEL. **FUSION BONDED EPOXY COATED**.
10. **OVERFLOW PIPE** - SCH. 40 PVC MATED TO DRAINAGE PIPE AT BASE SEAL.
11. **DRAINAGE PIPE** - ADS HIGHWAY GRADE WITH TRI-A COUPLER. SUSPEND PIPE DURING BACKFILL OPERATIONS TO PREVENT BUCKLING OR BREAKAGE. DIAMETER AS NOTED.
12. **BASE SEAL** - GEOTEXTILE OR CONCRETE SLURRY.
13. **ROCK** - WASHED, SIZED BETWEEN 3/8" AND 1-1/2" TO **BEST COMPLEMENT SOIL CONDITIONS**.
14. **FLOFAST® DRAINAGE SCREEN** - SCH. 40 PVC 0.120" SLOTTED WELL SCREEN WITH 32 SLOTS PER ROW/FT. 120" OVERALL LENGTH WITH TRI-B COUPLER.
15. **MIN. 4' Ø SHAFT** - DRILLED TO **MAINTAIN PERMEABILITY** OF DRAINAGE SOILS.
16. **FABRIC SEAL** - U.V. RESISTANT GEOTEXTILE - **TO BE REMOVED BY CUSTOMER** AT PROJECT COMPLETION.
17. **ABSORBENT** - HYDROPHOBIC PETROCHEMICAL SPONGE. MIN. 128 OZ. CAPACITY.
18. **FREEBOARD DEPTH** VARIES WITH INLET PIPE ELEVATION. INCREASE SETTLING CHAMBER DEPTH AS NEEDED TO MAINTAIN ALL INLET PIPE ELEVATIONS ABOVE OVERFLOW PIPE INLET.

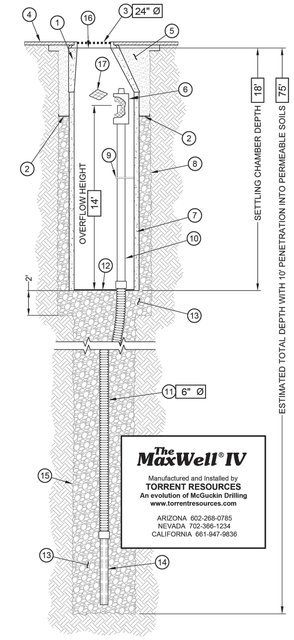

AZ Lic. ROC070465 A, ROC047067 B-4, ADWR 363
CA Lic. 528080, C-42, HAZ
NV Lic. 0035200 A - NM Lic. 90504 GF04
U.S. Patent No. 4,923,330 - ™ Trademark 1974, 1990, 2004

4"x8"x16" CMU BLOCK WALL

N.T.S.

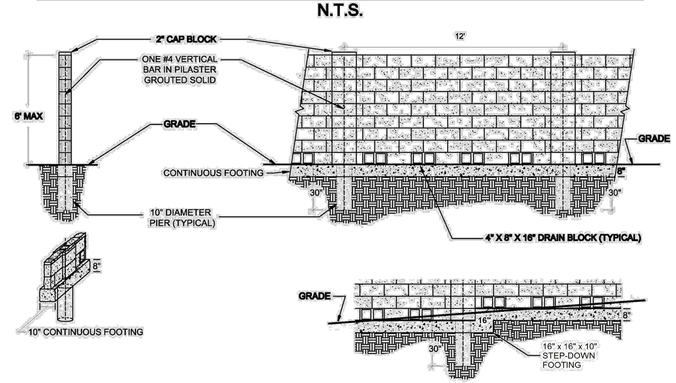

FOOTING STEP-DOWN DETAIL

NOTES:
ALL CELLS CONTAINING REBAR SHALL BE GROUTED SOLID
GRADE DIFFERENTIAL SHALL BE NO GREATER THAN ONE COURSE
EVERY OTHER BLOCK TURNED AT BASE COURSE. NO DECORATIVE BLOCK ALLOWED.
THIS FENCE DETAIL IS NOT INTENDED FOR USE IN SUN CITY OR ANY OTHER MASTER-PLANNED COMMUNITY
A PILASTER SHALL BE PLACED WHEREVER THE FOOTING STEPS DOWN

DETAIL 2: CMU WALL W/DRAINAGE OPENINGS

NTS

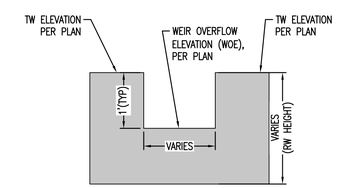

DETAIL 1: RC WEIR OVERFLOW

NTS

KIVA#	95-0002753
CPGD#	2206269
SPAD#	2206779
QS#	17-42

REVISIONS:

REYES DC, LLC
4730 W. HUBBELL ST. PHX AZ, 85035
(602)309-4247
REYESDCLLC@GMAIL.COM

SINGLE LOT GRADING AND DRAINAGE PLAN (WITH OFFSITE FLOWS)

PROJECT: DANCO RESIDENCE
4441 N JOKAKE DR SCOTTSDALE, AZ 85251

811 Know what's below. Call before you dig.

REGISTERED PROFESSIONAL ENGINEER (CIVIL) CERTIFICATE NO. 52934 JUAN G. J. REYES Date Signed 12/20/22 ARIZONA U.S.A. EXPIRES 12/31/23

DETAILS

JOB NO. 21701

DRAWN BY: JJR

SHEET NO. 3 OF 3

C3

City of Phoenix Plan #: 2206269-CPGD Date: 02/07/23

City of Phoenix Plan #: 2206269-CPGD Date: 02/07/23

C:\Users\jrod91\Dropbox\21701-Danco-Phx-GD\Work\G0-Plan-Danco.dwg jrod91 2023-01-19 12:43:36